CANNONDESIGN

SUBMITTAL IDENTIFICATION SHEET

To be completed by Contractor/CM

WEBSTER UNIVERSITY ISB
PROJECT NAME

8274 BIG BEND BLVD
ADDRESS

NUMBER

WEBSTER UNIVERSITY
OWNER

CANNON DESIGN
ARCHITECT / ENGINEER

Joe Voypick
SUBMITTED BY

084423-024
CONTRACTOR / CM SUBMITTAL NO.

CANNON DESIGN SUBMITTAL NO.

DRAWING / DETAIL REFERENCE

084423
SPECIFICATION SECTION / PARAGRAPH

MANUFACTURER / SUPPLIER

ITEM / PRODUCT ID

REQUIRED DATE

PRIORITY

CRITICAL

ITEM BEING SUBMITTED (check only one)

- ◯ Shop Drawings
- ◯ Samples (_____ copies)
- ◯ LEED Submittal
- ◯ Certification / Qualifications
- ◯ Record Documents
- ◯ Product Data
- ◯ Coordination Drawing
- ◯ Calculations
- ◯ Schedules
- ◯ O&M Manuals
- ◯ Other _____

ITEM BEING SUBMITTED FOR (check only one)

◯ Action ◯ Information Only ◯ Record

REMARKS OR DEVIATIONS

Sealed Curtainwall shop drawings. Files will not merge so shop drawings emailed to Melissa Pirtle and Kelvin Patel on 3/24.

CONTRACTOR / CM CERTIFICATION
(SUBMITTALS NOT CERTIFIED WILL BE RETURNED WITHOUT REVIEW)

PARIC

PARIC CORPORATION
SUBMITTAL STAMP

THIS SHOP DRAWING HAS BEEN REVIEWED BY PARIC CORPORATION

Subcontractor remains responsible for dimensions, quantities, coordination with other trades and compliance with contract documents.

By:
Devin D. Gates

Joe Voypick — REVIEWED BY
3/24/17 — DATE

To be completed by Reviewer

08 4423-024
CANNON DESIGN SUBMITTAL NUMBER

3/24/17
RECEIVED DATE

◯ A. No Exceptions Taken
No further review of submittal is required.

◯ B. Make Corrections Noted
Incorporate corrections in work; resubmission is not required.

◯ C. Revise and Resubmit
Revise as noted, and resubmit for review.

◯ D. Rejected
Submittal is not in compliance with Contract Documents; provide new submittal.

◯ E. For Record / Information Only
Submittal was reviewed for Record / Information purposes only.

◯ F. Not Required for Review
Submittal is not required by Contract Documents and has not been reviewed.

Review is for conformance with the design concept of this project and for general compliance with contract documents. Contractor is responsible for quantities, dimensions and compliance with contract documents and for information that pertains to fabrication processes, construction techniques and coordination of this work with all trades which will be affected thereby. This review is null and void if submittal deviates from contract documents and does not indicate or note deviations.

A/E COMMENTS ◯ See attached sheet(s) for additional comments

REVIEWED BY

2/25/17
DATE

WEBSTER UNIVERSITY
INTERDISCIPLINARY SCIENCE BUILDING
EXTERIOR CURTAIN WALL

Stewart P. Jeske, P.E.

Digitally signed by Stewart P. Jeske, P.E.
DN: C=US, E=sjeske@jeistructural.com, O=JEI Structural Engineering, CN="Stewart P. Jeske, P.E."
Reason: I am approving this document
Date: 2017.02.28 11:44:08-06'00'

MATERIALS

1. ALUMINUM FRAMING SYSTEMS:
   CURTAINWALL EGS-1:
      YKK YCW 750 SSG – 2 1/2" X 7 1/2", 2-SIDED SSG CURTAIN WALL SYSTEM WITH STRUCTURALLY GLAZED HORIZONTALS AND CAPTURED MULLIONS WITH 5" DEEP VERTICAL FACE COVER, COLOR 1
   CURTAINWALL EGS-2:
      YKK YCW 750 SSG – 2 1/2" X 6 9/16", 4-SIDED SSG CURTAIN WALL SYSTEM, COLOR 1
   CURTAINWALL EGS-3:
      YKK YCW 750 SSG – 2 1/2" X 5 1/16", 4-SIDED SSG CURTAIN WALL SYSTEM, COLOR 1
   CURTAINWALL EGS-3A:
      YKK YCW 750 SSG – 2 1/2" X 5 1/16", 4-SIDED SSG CURTAIN WALL SYSTEM, COLOR 2

2. ALUMINUM FINISH
   HIGH PERFORMANCE ORGANIC FINISH: 70% PVDF THREE-COAT FLUOROPOLYMER FINISH
   COLORS TO BE:
      COLOR 1 – DURANAR SUNSTORM PEWTER UC125923F
      COLOR 2 – DURANAR BLACK UC40577

3. STEEL
   A. STEEL ACCESSORIES USED TO ANCHOR OR REINFORCE ALUMINUM FRAMING OR PANELS SHALL COMPLY WITH THE FOLLOWING SPECIFICATIONS:
      a. ASTM A36 FOR STRUCTURAL SHAPES, PLATES, AND BARS
      b. ZINC RICH PRIME PAINT AFTER FABRICATION

4. SEALANTS
   SEALANT #1 – WEATHER SEALANT AT GLASS DOW 790 COLOR BLACK
   SEALANT #2 – STRUCTURAL SILICONE DOW 995 COLOR BLACK – MINIMUM 3/8" SEALANT BITE AT ALL SSG JOINTS
   SEALANT #3 – PERIMETER WEATHER SEALANT DOW 790 COLOR CHARCOAL

5. MISCELANEOUS
   A. SHIMS SHALL BE HORSESHOE SHAPED HIGH IMPACT POLYSTYRENE, UNLESS NOTED OTHERWISE.
   B. BOND BREAKER TAPE SHALL BE A POLYETHYLENE FILM TAPE WITH ADHESIVE ONE SIDE, OR OTHER MATERIAL SHOWN TO PRODUCE A LACK OF ADHESION IN TESTING DONE BY THE SEALANT'S MANUFACTURER.

6. GLASS:

GLE-1
1" CLEAR VNE1-63 INSULATING GLASS UNITS:
1/4" CLEAR VNE-63 #2 HS
1/2" AIR
1/4" CLEAR HS

GLE-1T
1" CLEAR VNE1-63 INSULATING GLASS UNITS:
1/4" CLEAR VNE-63 #2 TE
1/2" AIR
1/4" CLEAR TE

GLE-2
1" VNE1-63 INSULATING SPANDREL GLASS UNITS:
1/4" CLEAR HS VNE-63 #2
1/2" AIR
1/4" CLEAR HS W/ V908 GRAY VIRASPAN #4

GLE-3
1" CLEAR INSULATING GLASS UNITS W/ SILKSCREEN:
1/4" CLEAR HS VNE-63 #2, V908 GRAY SILKSCREEN #5006 – 40% #2
1/2" AIR
1/4" CLEAR HS

GLE-3T
1" CLEAR TEMPERED INSULATING GLASS UNITS W/ SILKSCREEN:
1/4" CLEAR HS VNE-63 #2, V908 GRAY SILKSCREEN #5006 – 40% #2
1/2" AIR
1/4" CLEAR TE

GLE-4
1" CLEAR INSULATING SPANDREL GLASS UNITS WITH SILKSCREEN:
1/4" CLEAR HS VNE1-63 #2, V908 GRAY SILKSCREEN #5006 – 40% #2
1/2" AIR
1/4" CLEAR HS W/ V908 GRAY VIRASPAN #4

GLE-5
1 5/16" CLEAR VNE1-63 LAMINATED INSULATING GLASS UNITS:
1/4" CLEAR HS, 0.060 CLEAR PVB, 1/4" CLEAR VNE1-63 #4 HS
1/2" AIR
1/4" CLEAR TE

GLJ-3
1/4" CLEAR TEMPERED

GLJ-4
5/8" CLEAR TEMPERED

DRAWING INDEX

001.....COVER SHEET
102-104.....FLOOR PLANS
200-220.....CURTAIN WALL ELEVATIONS
300-325.....SECTION DETAILS EGS-1 AND EGS-2
351-360.....SECTION DETAILS EGS-3
400-425.....PLAN DETAILS EGS-1 AND EGS-2
451-455.....PLAN DETAILS EGS-3
500-501.....ISOMETRIC VIEWS

NGG LTD

NGG LTD, INCORPORATED
1550 Craigshire Road Suite 202
St. Louis, Missouri 63146

Tel 314-336-2515
Fax 314-336-2521

Professional Seal 02/28/2017

The seal on these plans are not valid with out electronic seal on cover.

Sub. No.	Rev. No.	Date	Drawn By	Submittal/Revision Description
4	3	11/28/16	IY	4TH SUBMISSION
3	2	11/8/16	IY	3RD SUBMISSION
2	1	10/19/16	IY	2ND SUBMISSION
1	–	8/18/16	IY	1ST SUBMISSION

Proprietary Notice

This drawing sheet and contents herein are property of NGG. Use of this drawing, contents or design concepts for purposes other than estimating, drawing preparation and/or manufacturing for NGG shall be cause for legal recourse by NGG.

Project Name
WEBSTER UNIVERSITY
Location
St. Louis, Missouri

Architect
CANNON DESIGN
Location
St. Louis, MO

Contractor
PARIC
Location
St. Louis, Missouri

Owner
WEBSTER UNIVERSITY
Location
St. Louis, Missouri

Drawn Date	Scale
8/10/16	AS NOTED

NGG Project No.
5-2013

Drawing Title
COVER

Drawn By	Sheet No.
IY	001

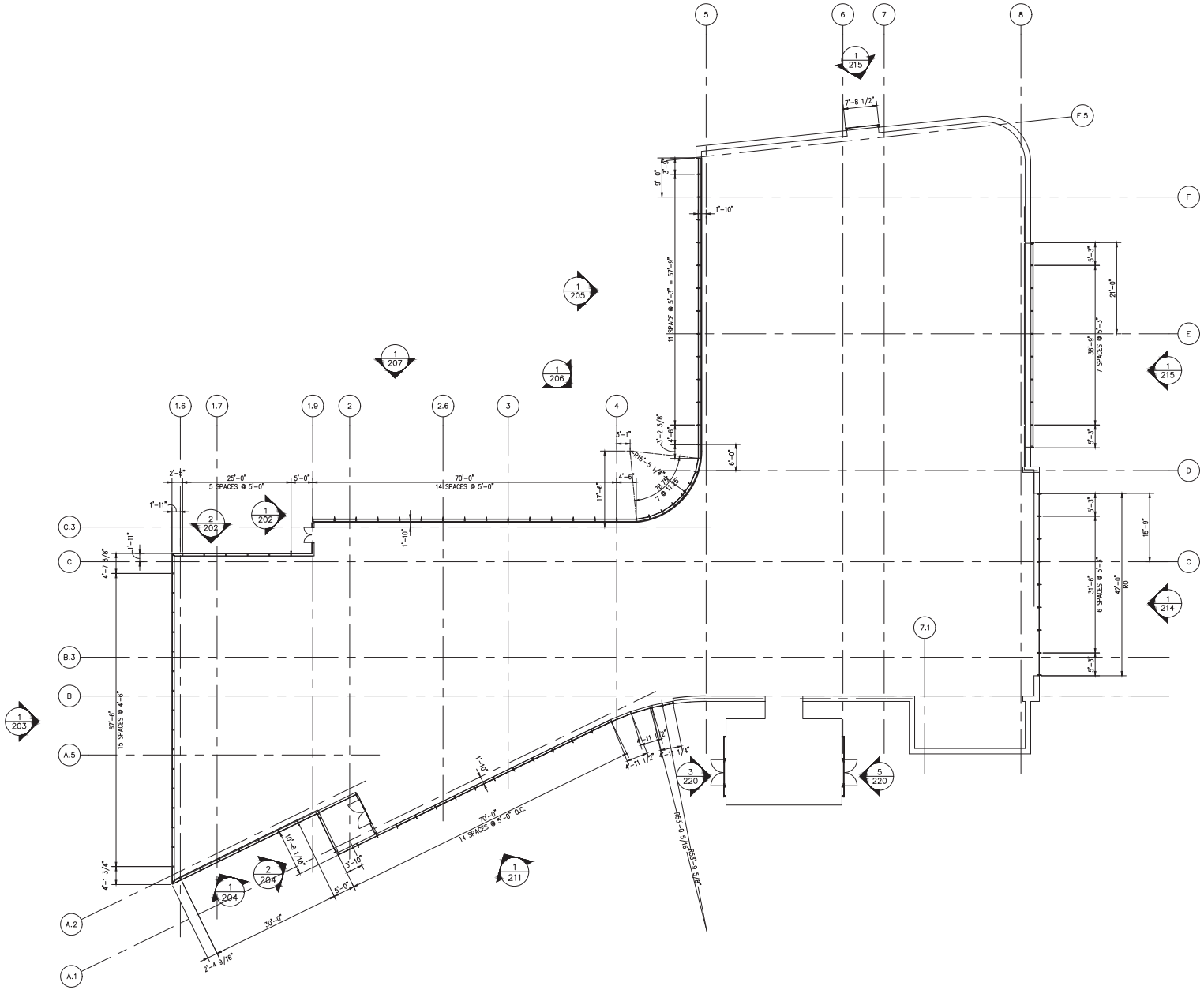

1 LEVEL 2 PLAN
Scale: 3/32"=1'-0"

NGG LTD

NGG LTD, INCORPORATED
1550 Craigshire Road Suite 202
St. Louis, Missouri 63146

Tel 314-336-2515
Fax 314-336-2521

Professional Seal 02/28/2017

The seal on these plans are not valid with out electronic seal on cover.

Sub. No.	Rev. No.	Date	Drawn By	Submittal/Revision Description
4	3	11/29/16	IY	3RD SUBMISSION
3	1	11/8/16	IY	2ND SUBMISSION
1	-	10/19/16	IY	

Proprietary Notice

This drawing sheet and contents herein are property of NGG. Use of this drawing, contents or design concepts for purposes other than estimating, drawing preparation and/or manufacturing for NGG shall be cause for legal recourse by NGG.

Project Name
WEBSTER UNIVERSITY
Location
St. Louis, Missouri

Architect
CANNON DESIGN
Location
St. Louis, Missouri

Contractor
PARIC
Location
St. Louis, Missouri

Owner
WEBSTER UNIVERSITY
Location
St. Louis, Missouri

Drawn Date	Scale
01/02/14	AS NOTED

NGG Project No.

Drawing Title
EMBED TITLE SHEET

Drawn By	Sheet No.
IY	102

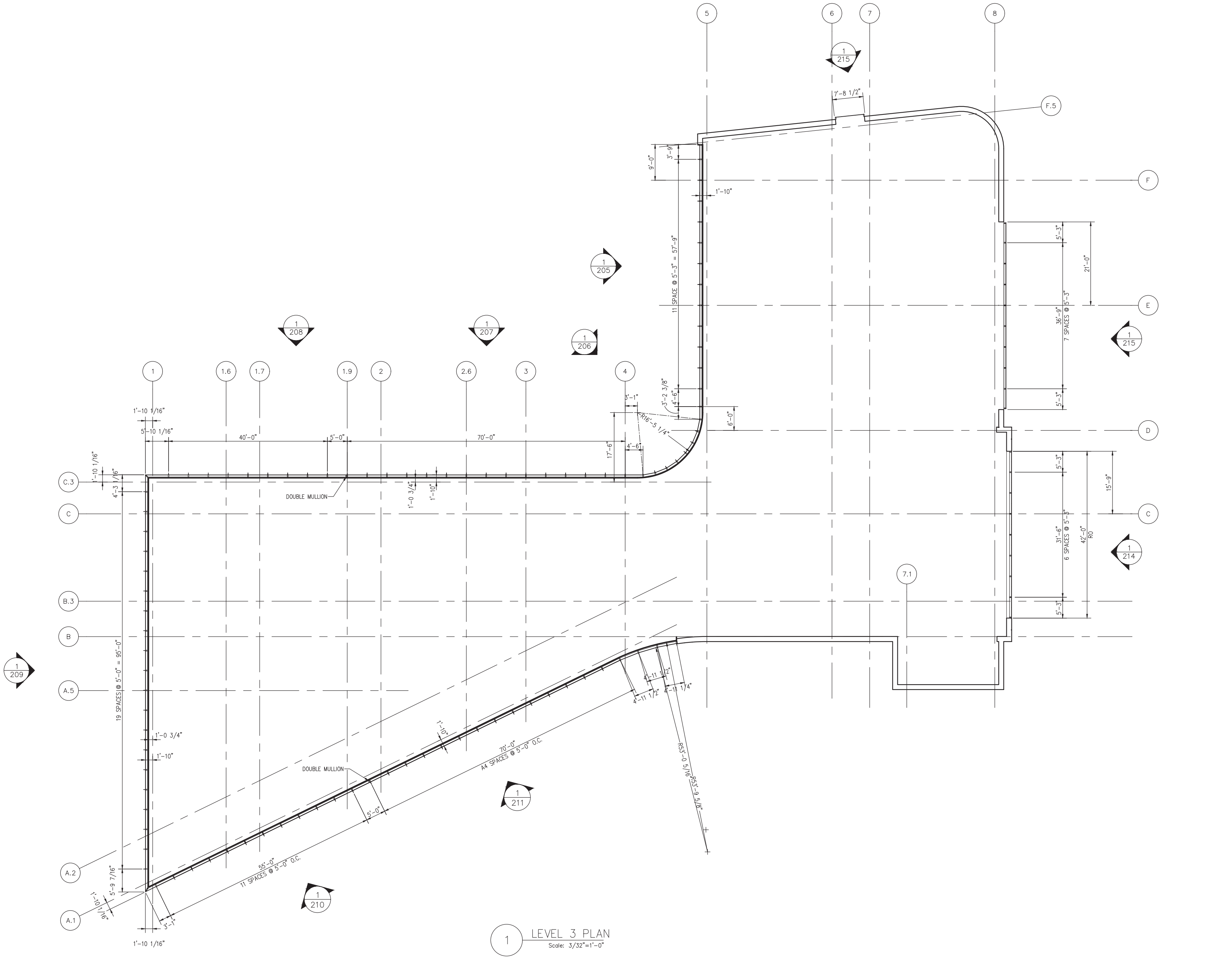

1 LEVEL 3 PLAN
Scale: 3/32"=1'-0"

NGG LTD

NGG LTD, INCORPORATED
1850 Craigshire Road Suite 202
St. Louis, Missouri 63146

Tel 314-336-2515
Fax 314-336-2521

Professional Seal 02/28/2017

The seals on these plans are not valid with out electronic seal on cover.

Sub. No.	Rev. No.	Date	Drawn By	Submittal/Revision Description
4	3	11/29/16	IY	3RD SUBMISSION
3	1	11/8/16	IY	2ND SUBMISSION
1	-	10/19/16	IY	

Proprietary Notice

This drawing sheet and contents herein are property of NGG. Use of this drawing, contents or design concepts for purposes other than estimating, drawing preparation and/or manufacturing for NGG shall be cause for legal recourse by NGG.

Project Name
WEBSTER UNIVERSITY
Location
St. Louis, Missouri

Architect
CANNON DESIGN
Location
St. Louis, Missouri

Contractor
PARIC
Location
St. Louis, Missouri

Owner
WEBSTER UNIVERSITY
Location
St. Louis, Missouri

Drawn Date	Scale
01/02/14	AS NOTED

NGG Project No.

Drawing Title
EMBED TITLE SHEET

Drawn By	Sheet No.
IY	103

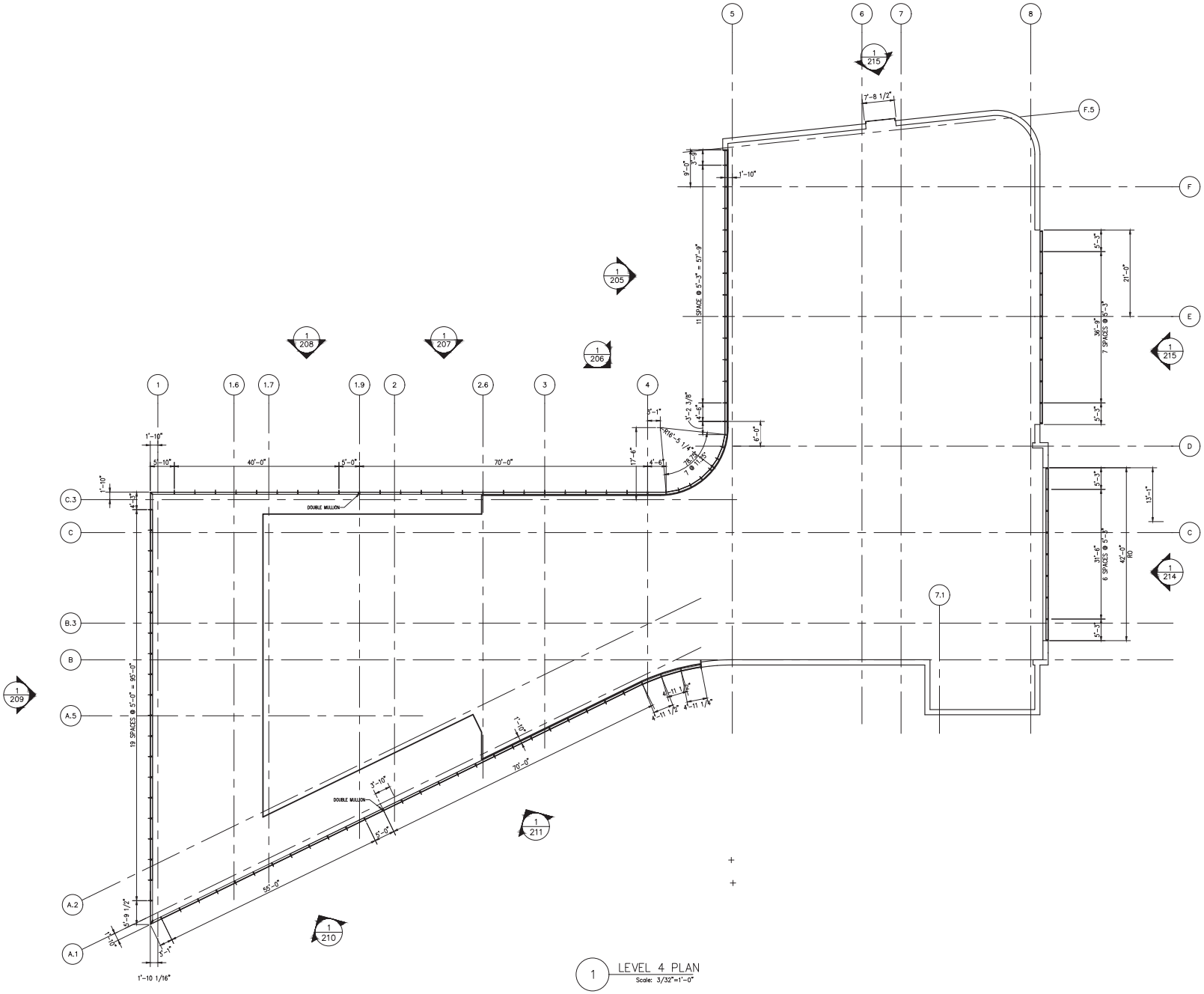

NGG LTD

NGG LTD, INCORPORATED
1550 Craigshire Road Suite 202
St. Louis, Missouri 63146

Tel 314-336-2515
Fax 314-336-2521

Professional Seal 02/28/2017

STATE OF MISSOURI
STEWART P. FOKE
NUMBER PE-24002
PROFESSIONAL ENGINEER

The seal on these plans are not valid with out electronic seal on cover.

Sub. No.	Rev. No.	Date	Drawn By	Submittal/Revision Description
4	3	11/29/16	IY	3RD SUBMISSION
3	1	11/8/16	IY	2ND SUBMISSION
1	-	10/19/16	IY	

Proprietary Notice

This drawing sheet and contents herein are property of NGG. Use of this drawing, contents or design concepts for purposes other than estimating, drawing preparation and/or manufacturing for NGG shall be cause for legal recourse by NGG.

Project Name
WEBSTER UNIVERSITY
Location
St. Louis, Missouri

Architect
CANNON DESIGN
Location
St. Louis, Missouri

Contractor
PARIC
Location
St. Louis, Missouri

Owner
WEBSTER UNIVERSITY
Location
St. Louis, Missouri

Drawn Date	Scale
01/02/14	AS NOTED

NGG Project No.

Drawing Title
EMBED TITLE SHEET

Drawn By	Sheet No.
IY	104

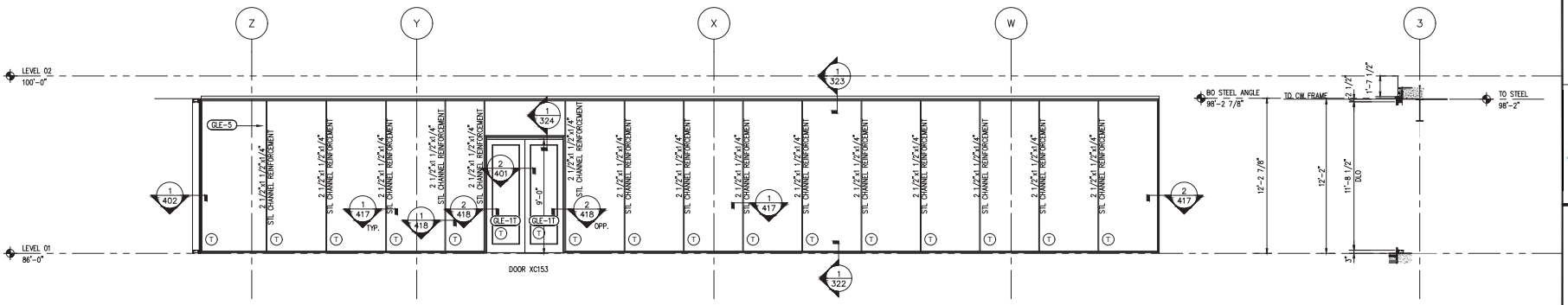

1 WEST ELEVATION
Scale: 3/4"=1'-0"
EGS-3A
COLOR: BLACK

3 SECTION
Scale: 3/4"=1'-0"

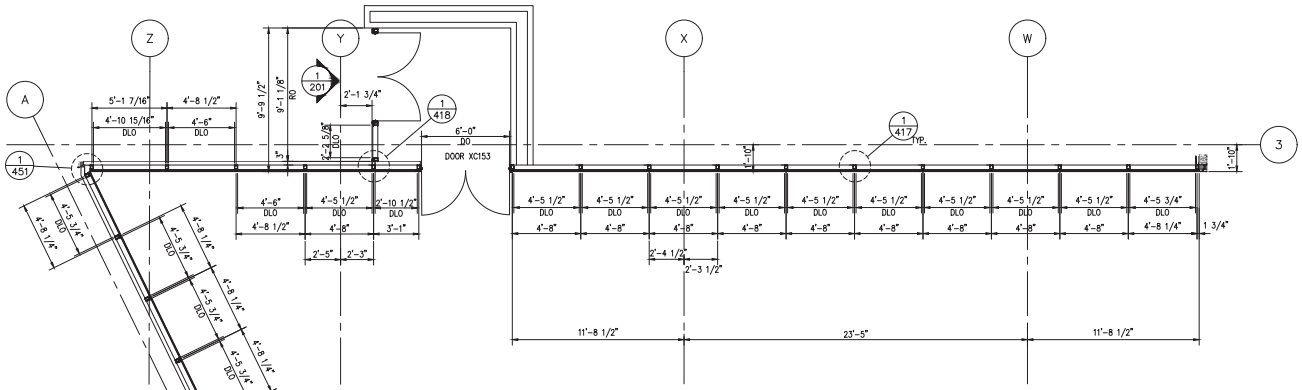

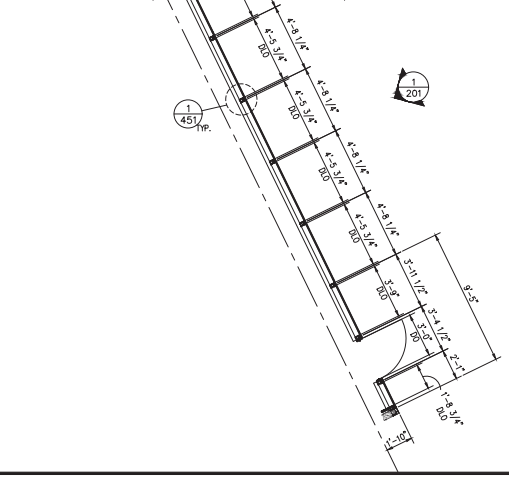

2 PLAN
Scale: 3/4"=1'-0"

NGG LTD

NGG LTD, INCORPORATED
1850 Craigshire Road Suite 202
St. Louis, Missouri 63146

Tel 314-336-2515
Fax 314-336-2521

Professional Seal 02/28/2017

STATE OF MISSOURI
STEWART P. FISHER
PE-24002
STEWART P. FISHER
PE-24002

The seal on these plans are not valid with out electronic seal on cover.

Sub. No.	Rev. No.	Date	Drawn. By	Submittal/Revision Description
4	3	11/28/16	IY	4TH SUBMISSION
3	2	11/8/16	IY	3RD SUBMISSION
2	1	10/19/16	IY	2ND SUBMISSION
1	-	8/10/16	IY	1ST SUBMISSION

Proprietary Notice

This drawing sheet and contents herein are property of NGG. Use of this drawing, contents or design concepts for purposes other than estimating, drawing preparation and/or manufacturing for NGG shall be cause for legal recourse by NGG.

Project Name
WEBSTER UNIVERSITY
Location
St. Louis, Missouri

Architect
CANNON DESIGN
Location
St. Louis, Missouri

Contractor
PARIC
Location
St. Louis, Missouri

Owner
WEBSTER UNIVERSITY
Location
St. Louis, Missouri

Drawn Date	Scale
08/10/16	AS NOTED

NGG Project No.

Drawing Title
EMBED TITLE SHEET

Drawn By	Sheet No.
IY	200

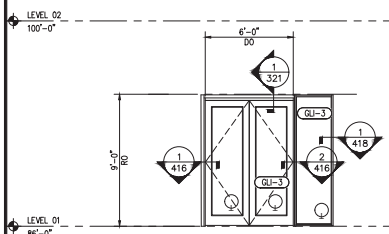

2 INTERIOR VESTIBULE
Scale: 3/4"=1'-0"
EGS-3A
COLOR: BLACK

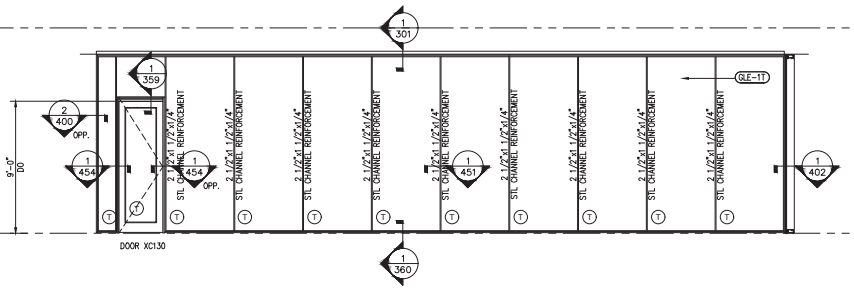

1 SOUTH ELEVATION
Scale: 3/4"=1'-0"
EGS-2A
COLOR: BLACK

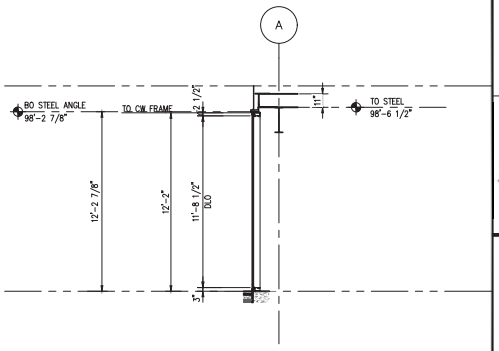

3 SECTION
Scale: 3/4"=1'-0"

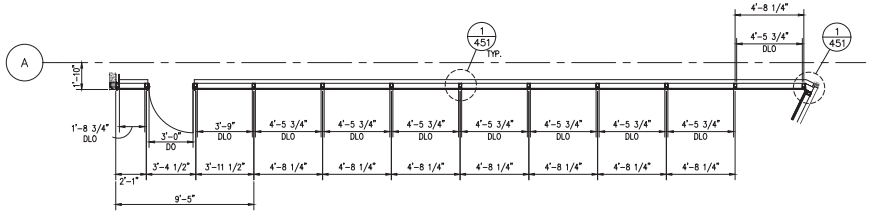

4 PLAN
Scale: 3/4"=1'-0"

NGG LTD

NGG LTD, INCORPORATED
1850 Craigshire Road Suite 202
St. Louis, Missouri 63146

Tel 314-336-2515
Fax 314-336-2521

Professional Seal 02/28/2017

STATE OF MISSOURI
STEWART P. FOKE
PE-24002
PROFESSIONAL ENGINEER

The seal on these plans are not valid with out electronic seal on cover.

Sub. No.	Rev. No.	Date	Drawn. By	Submittal/Revision Description
4	3	11/28/16	IY	4TH SUBMISSION
3	2	11/8/16	IY	3RD SUBMISSION
2	1	10/19/16	IY	2ND SUBMISSION
1	-	8/10/16	IY	1ST SUBMISSION

Proprietary Notice

This drawing sheet and contents herein are property of NGG. Use of this drawing, contents or design concepts for purposes other than estimating, drawing preparation and/or manufacturing for NGG shall be cause for legal recourse by NGG.

Project Name
WEBSTER UNIVERSITY
Location
St. Louis, Missouri

Architect
CANNON DESIGN
Location
St. Louis, Missouri

Contractor
PARIC
Location
St. Louis, Missouri

Owner
WEBSTER UNIVERSITY
Location
St. Louis, Missouri

Drawn Date	Scale
08/10/16	AS NOTED

NGG Project No.

Drawing Title
EMBED TITLE SHEET

Drawn By	Sheet No.
IY	201

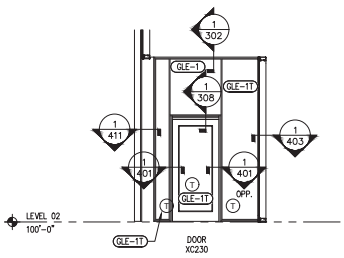

1 WEST ELEVATION
Scale: 3/4"=1'-0"
EGS-2
COLOR: PEWTER

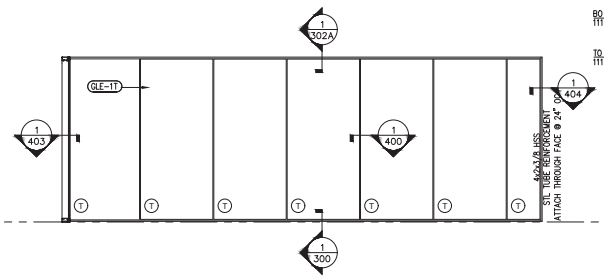

2 NORTH ELEVATION
Scale: 3/4"=1'-0"
EGS-2
COLOR: PEWTER

3 SECTION
Scale: 3/4"=1'-0"

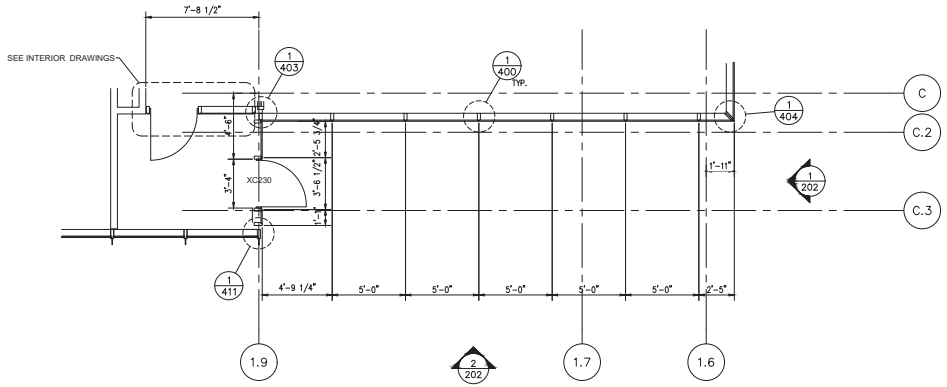

4 PLAN
Scale: 3/4"=1'-0"

NGG LTD

NGG LTD, INCORPORATED
1550 Craigshire Road Suite 202
St. Louis, Missouri 63146

Tel 314-336-2515
Fax 314-336-2521

Professional Seal 02/28/2017

The seal on these plans are not valid with out electronic seal on cover.

Sub. No.	Rev. No.	Date	Drawn By	Submittal/Revision Description
4	3	11/28/16	IY	4TH SUBMISSION
3	2	11/8/16	IY	3RD SUBMISSION
2	1	10/19/16	IY	2ND SUBMISSION
1	-	8/10/16	IY	1ST SUBMISSION

Proprietary Notice

This drawing sheet and contents herein are property of NGG. Use of this drawing, contents or design concepts for purposes other than estimating, drawing preparation and/or manufacturing for NGG shall be cause for legal recourse by NGG.

Project Name
WEBSTER UNIVERSITY
Location
St. Louis, Missouri

Architect
CANNON DESIGN
Location
St. Louis, Missouri

Contractor
PARIC
Location
St. Louis, Missouri

Owner
WEBSTER UNIVERSITY
Location
St. Louis, Missouri

Drawn Date	Scale
08/10/16	AS NOTED

NGG Project No.

Drawing Title
EMBED TITLE SHEET

Drawn By	Sheet No.
IY	202

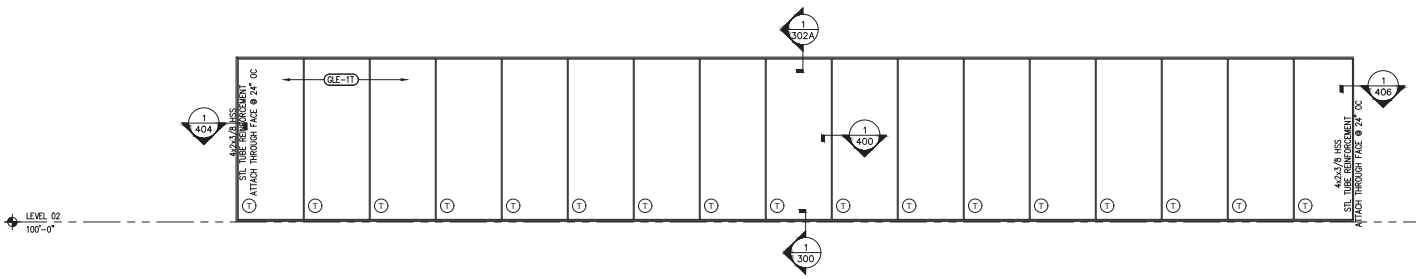

1 WEST ELEVATION
Scale: 3/4"=1'-0"
EGS-2
COLOR: PEWTER

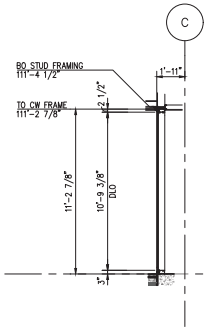

3 SECTION
Scale: 3/4"=1'-0"

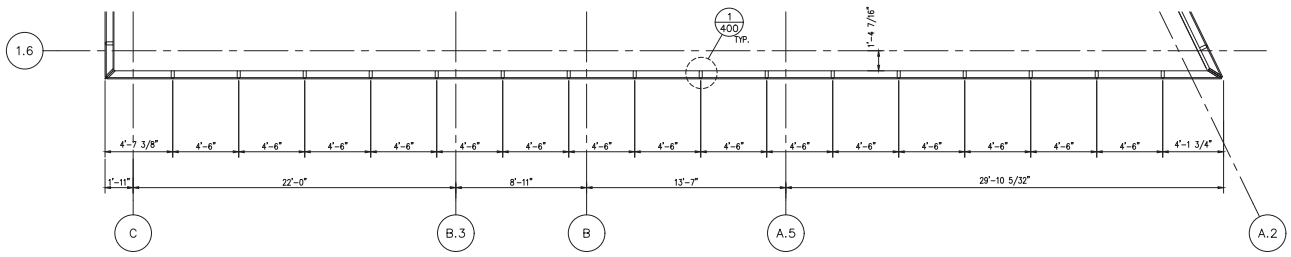

2 PLAN
Scale: 3/4"=1'-0"

NGG LTD

NGG LTD, INCORPORATED
1550 Craigshire Road Suite 202
St. Louis, Missouri 63146

Tel 314-336-2515
Fax 314-336-2521

Professional Seal 02/28/2017

The seal on these plans are not valid with out electronic seal on cover.

Sub. No.	Rev. No.	Date	Drawn By	Submittal/Revision Description
4	3	11/29/16	IY	4TH SUBMISSION
3	2	11/8/16	IY	3RD SUBMISSION
2	1	10/19/16	IY	2ND SUBMISSION
1	-	8/10/16	IY	1ST SUBMISSION

Proprietary Notice

This drawing sheet and contents herein are property of NGG. Use of this drawing, contents or design concepts for purposes other than estimating, drawing preparation and/or manufacturing for NGG shall be cause for legal recourse by NGG.

Project Name
WEBSTER UNIVERSITY
Location
St. Louis, Missouri

Architect
CANNON DESIGN
Location
St. Louis, Missouri

Contractor
PARIC
Location
St. Louis, Missouri

Owner
WEBSTER UNIVERSITY
Location
St. Louis, Missouri

Drawn Date	Scale
08/10/16	AS NOTED

NGG Project No.

Drawing Title
EMBED TITLE SHEET

Drawn By	Sheet No.
IY	203

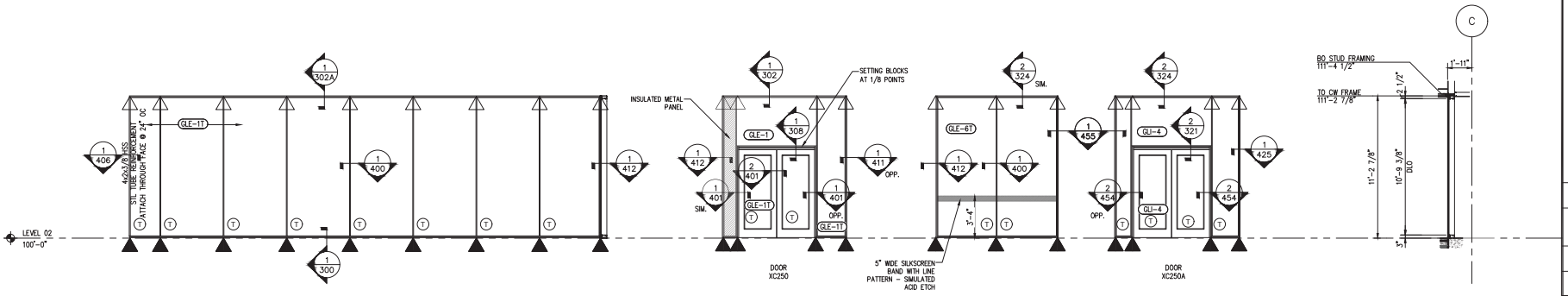

1 SOUTH ELEVATION
Scale: 3/4"=1'-0"
EGS-2
COLOR: PEWTER

2 WEST ELEVATION
Scale: 3/4"=1'-0"
EGS-2
COLOR: PEWTER

3 INTERIOR VESTIBULE
Scale: 3/4"=1'-0"
EGS-2
COLOR: PEWTER

4 INTERIOR VESTIBULE
Scale: 3/4"=1'-0"
EGS-2
COLOR: PEWTER

5 SECTION
Scale: 3/4"=1'-0"

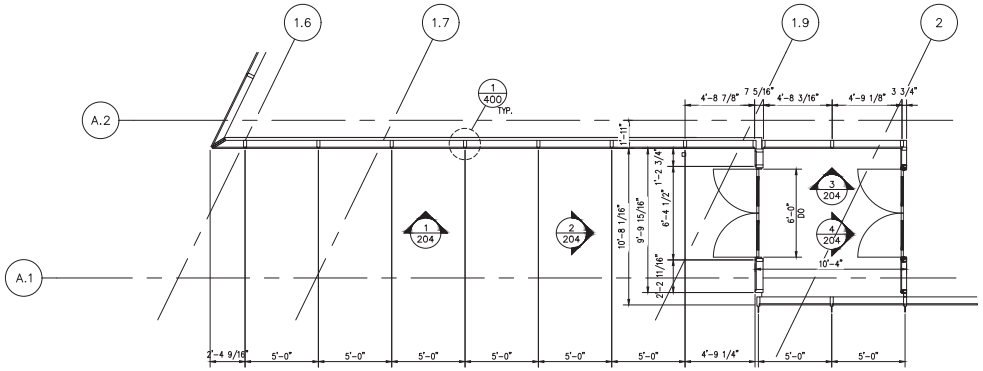

3 PLAN
Scale: 3/4"=1'-0"

NGG LTD

NGG LTD, INCORPORATED
1850 Craigshire Road Suite 202
St. Louis, Missouri 63146

Tel 314-336-2515
Fax 314-336-2521

Professional Seal 02/28/2017

The seal on these plans are not valid with out electronic seal on cover.

Sub. No.	Rev. No.	Date	Drawn By	Submittal/Revision Description
4	3	11/29/16	IY	4TH SUBMISSION
3	2	11/8/16	IY	3RD SUBMISSION
2	1	10/19/16	IY	2ND SUBMISSION
1	-	8/10/16	IY	1ST SUBMISSION

Proprietary Notice

This drawing sheet and contents herein are property of NGG. Use of this drawing, contents or design concepts for purposes other than estimating, drawing preparation and/or manufacturing for NGG shall be cause for legal recourse by NGG.

Project Name
WEBSTER UNIVERSITY
Location
St. Louis, Missouri

Architect
CANNON DESIGN
Location
St. Louis, Missouri

Contractor
PARIC
Location
St. Louis, Missouri

Owner
WEBSTER UNIVERSITY
Location
St. Louis, Missouri

Drawn Date	Scale
08/10/16	AS NOTED

NGG Project No.

Drawing Title
EMBED TITLE SHEET

Drawn By	Sheet No.
IY	204

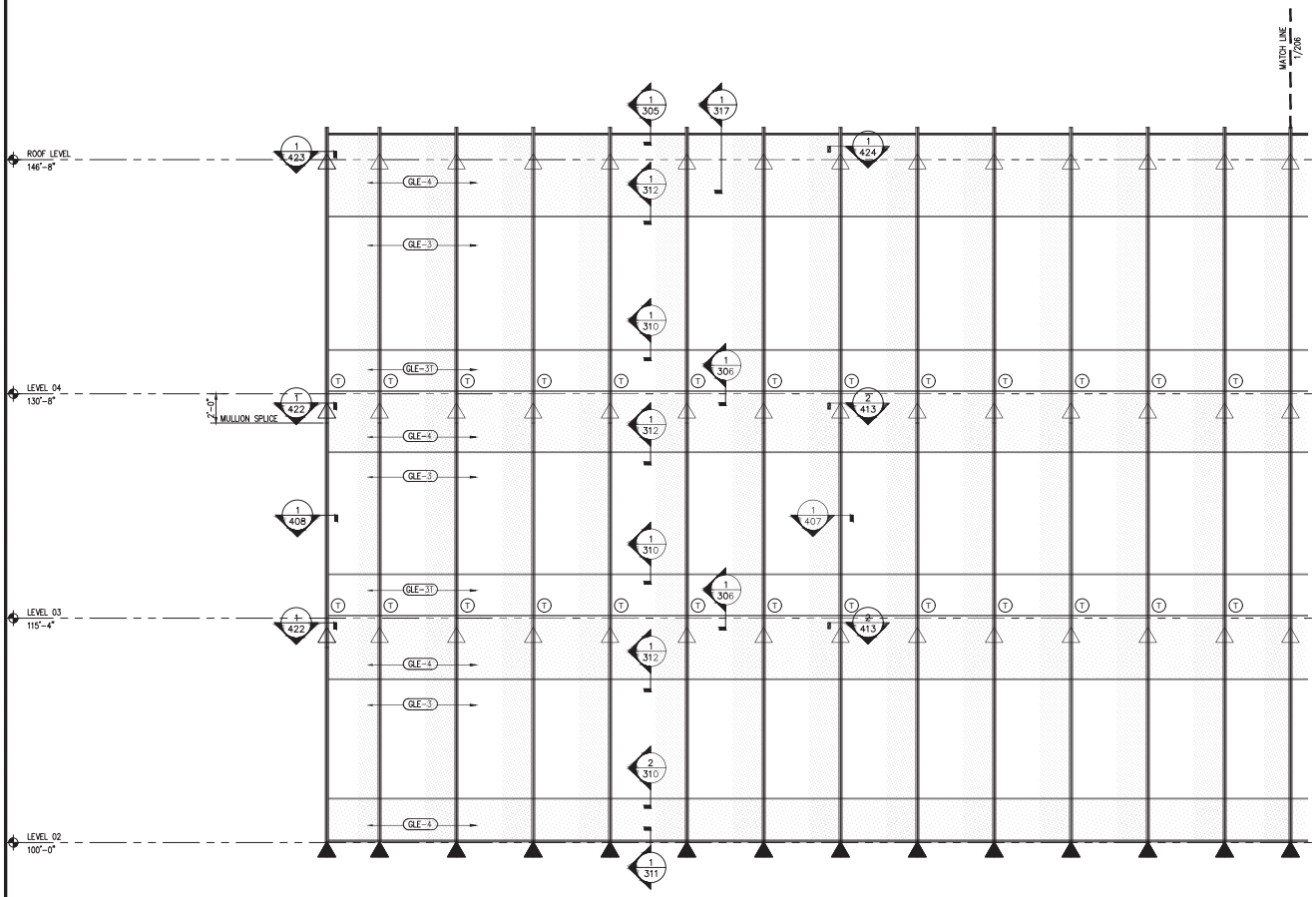

1 WEST ELEVATION
Scale: 3/4"=1'-0"
EGS-1
COLOR: PEWTER

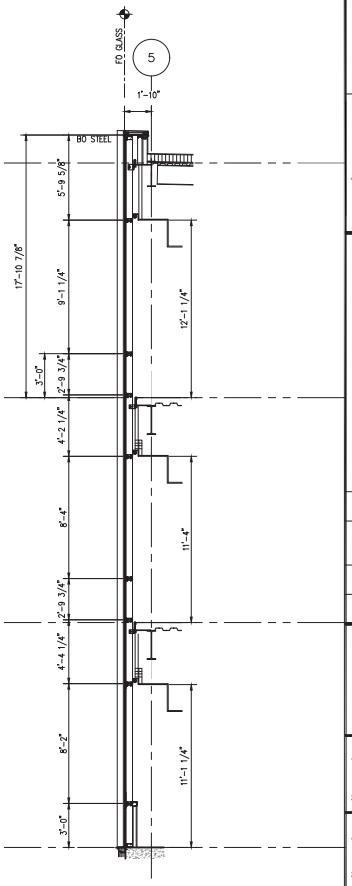

3 SECTION
Scale: 3/4"=1'-0"
ARCH REF: 1/A0402

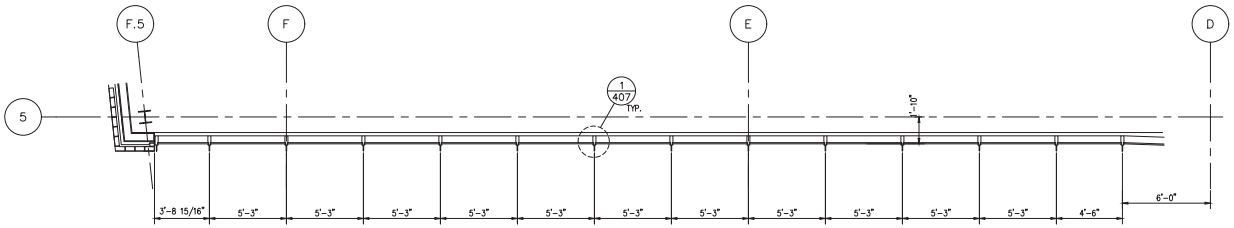

2 PLAN
Scale: 3/4"=1'-0"

NGG LTD

NGG LTD, INCORPORATED
1850 Craigshire Road Suite 202
St. Louis, Missouri 63146

Tel 314-336-2515
Fax 314-336-2521

Professional Seal 02/28/2017

STATE OF MISSOURI
STEWART P. FOKE
PE-24002
PROFESSIONAL ENGINEER

The seal on these plans are not valid with out electronic seal on cover.

Sub. No.	Rev. No.	Date	Drawn. By	Submittal/Revision Description
4	3	11/28/16	IY	4TH SUBMISSION
3	2	11/8/16	IY	3RD SUBMISSION
2	1	10/19/16	IY	2ND SUBMISSION
1	-	8/10/16	IY	1ST SUBMISSION

Proprietary Notice

This drawing sheet and contents herein are property of NGG. Use of this drawing, contents or design concepts for purposes other than estimating, drawing preparation and/or manufacturing for NGG shall be cause for legal recourse by NGG.

Project Name
WEBSTER UNIVERSITY
Location
St. Louis, Missouri

Architect
CANNON DESIGN
Location
St. Louis, Missouri

Contractor
PARIC
Location
St. Louis, Missouri

Owner
WEBSTER UNIVERSITY
Location
St. Louis, Missouri

Drawn Date	Scale
08/10/16	AS NOTED

NGG Project No.

Drawing Title
EMBED TITLE SHEET

Drawn By	Sheet No.
IY	205

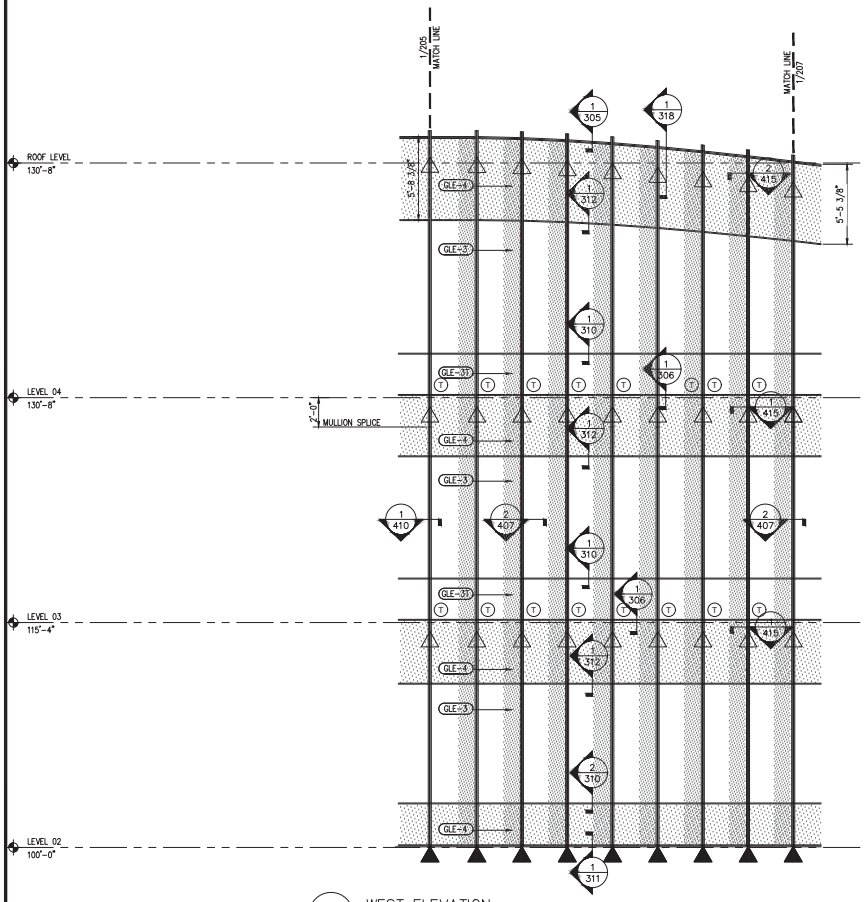

1 WEST ELEVATION
Scale: 3/4"=1'-0"
EGS-1
COLOR: PEWTER

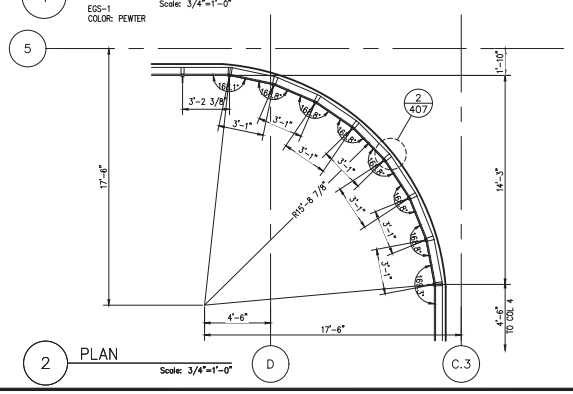

2 PLAN
Scale: 3/4"=1'-0"

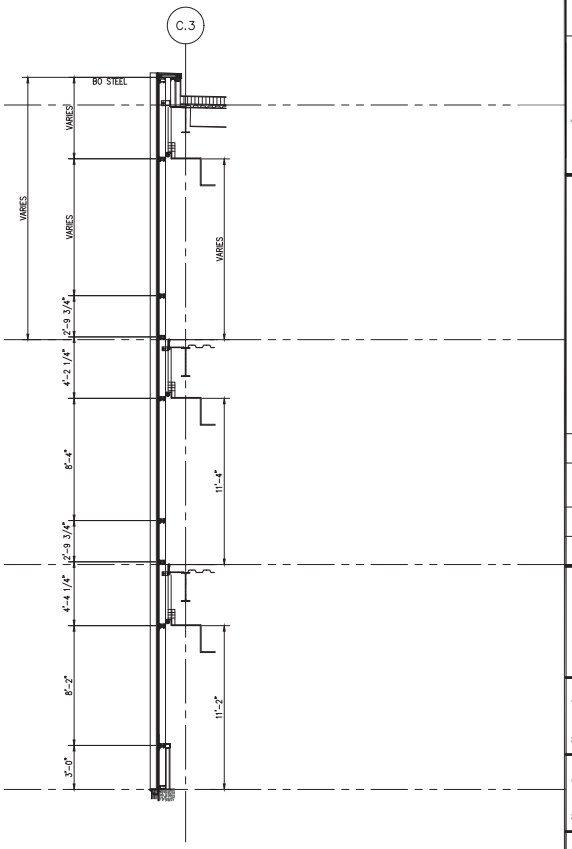

3 SECTION
Scale: 3/4"=1'-0"
ARCH REF: 3/A0401

NGG LTD

NGG LTD, INCORPORATED
1850 Craigshire Road Suite 202
St. Louis, Missouri 63146

Tel 314-336-2515
Fax 314-336-2521

Professional Seal 02/28/2017

The seal on these plans are not valid with out electronic seal on cover.

Sub. No.	Rev. No.	Date	Drawn By	Submittal/Revision Description
4	3	11/28/16	IY	4TH SUBMISSION
3	2	11/8/16	IY	3RD SUBMISSION
2	1	10/19/16	IY	2ND SUBMISSION
1	–	8/10/16	IY	1ST SUBMISSION

Proprietary Notice

This drawing sheet and contents herein are property of NGG. Use of this drawing, contents or design concepts for purposes other than estimating, drawing preparation and/or manufacturing for NGG shall be cause for legal recourse by NGG.

Project Name
WEBSTER UNIVERSITY
Location
St. Louis, Missouri

Architect
CANNON DESIGN
Location
St. Louis, Missouri

Contractor
PARIC
Location
St. Louis, Missouri

Owner
WEBSTER UNIVERSITY
Location
St. Louis, Missouri

Drawn Date	Scale
08/10/16	AS NOTED

NGG Project No.

Drawing Title
EMBED TITLE SHEET

Drawn By	Sheet No.
IY	206

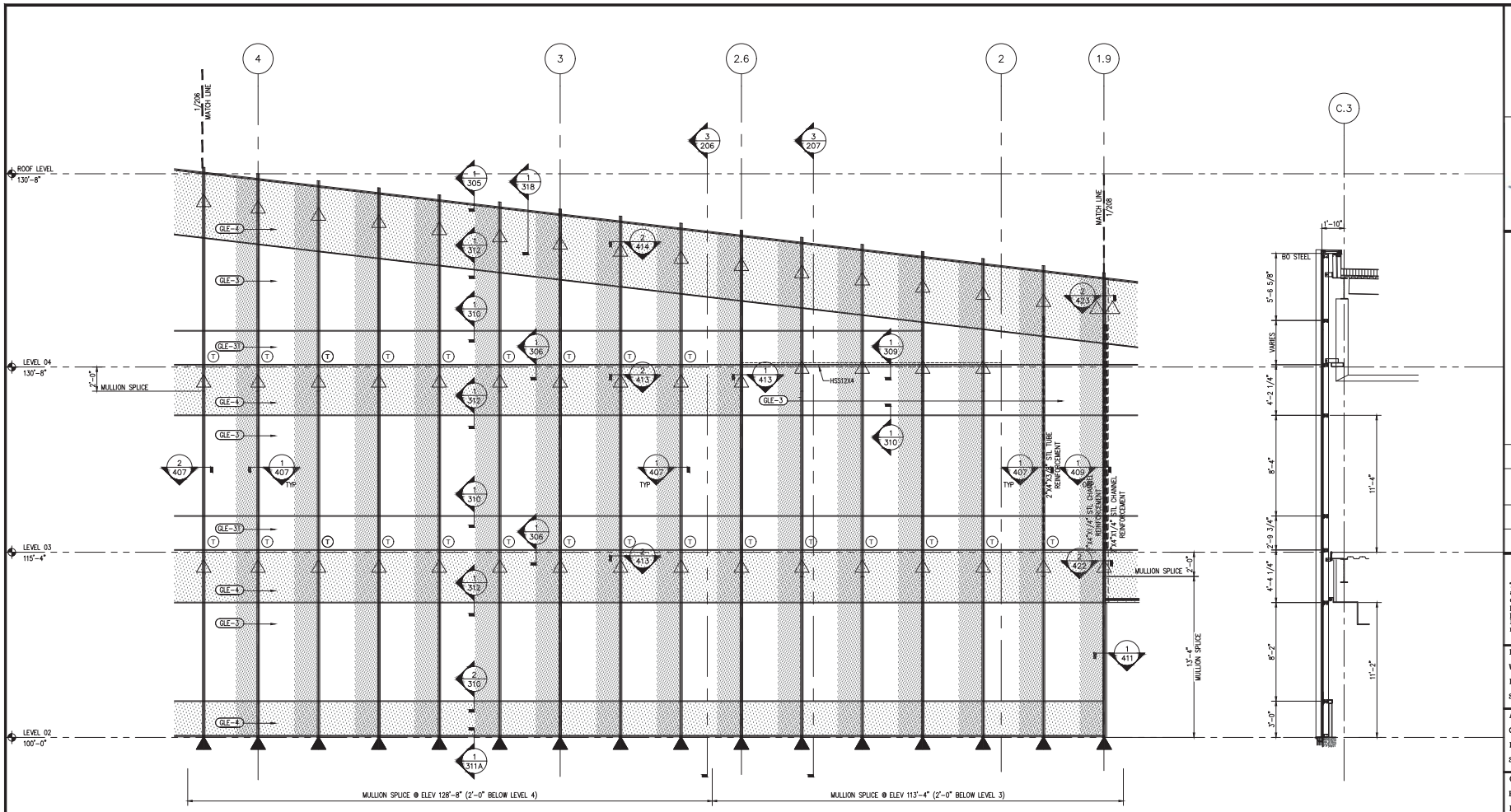

1 NORTH ELEVATION
Scale: 3/4"=1'-0"
EGS-1
COLOR: PEWTER

3 SECTION
Scale: 3/4"=1'-0"
ARCH REF: 2/A0401

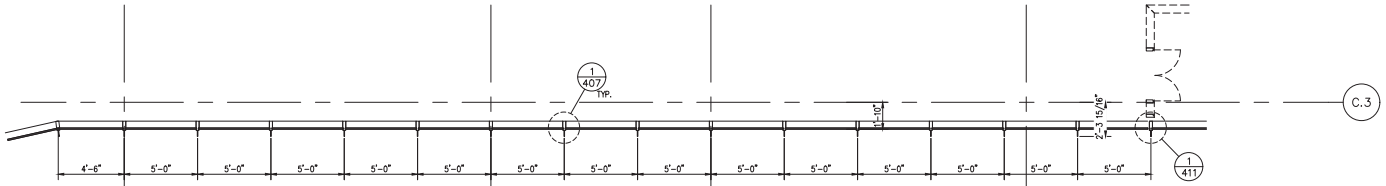

2 PLAN
Scale: 3/4"=1'-0"

NGG LTD

NGG LTD, INCORPORATED
1550 Craigshire Road Suite 202
St. Louis, Missouri 63146

Tel 314-336-2515
Fax 314-336-2521

Professional Seal 02/28/2017

The seal on these plans are not valid with out electronic seal on cover.

Sub. No.	Rev. No.	Date	Drawn By	Submittal/Revision Description
4	3	11/28/16	IY	4TH SUBMISSION
3	2	11/8/16	IY	3RD SUBMISSION
2	1	10/19/16	IY	2ND SUBMISSION
1	-	8/10/16	IY	1ST SUBMISSION

Proprietary Notice

This drawing sheet and contents herein are property of NGG. Use of this drawing, contents or design concepts for purposes other than estimating, drawing preparation and/or manufacturing for NGG shall be cause for legal recourse by NGG.

Project Name
WEBSTER UNIVERSITY
Location
St. Louis, Missouri

Architect
CANNON DESIGN
Location
St. Louis, Missouri

Contractor
PARIC
Location
St. Louis, Missouri

Owner
WEBSTER UNIVERSITY
Location
St. Louis, Missouri

Drawn Date	Scale
08/10/16	AS NOTED

NGG Project No.

Drawing Title
EMBED TITLE SHEET

Drawn By	Sheet No.
IY	207

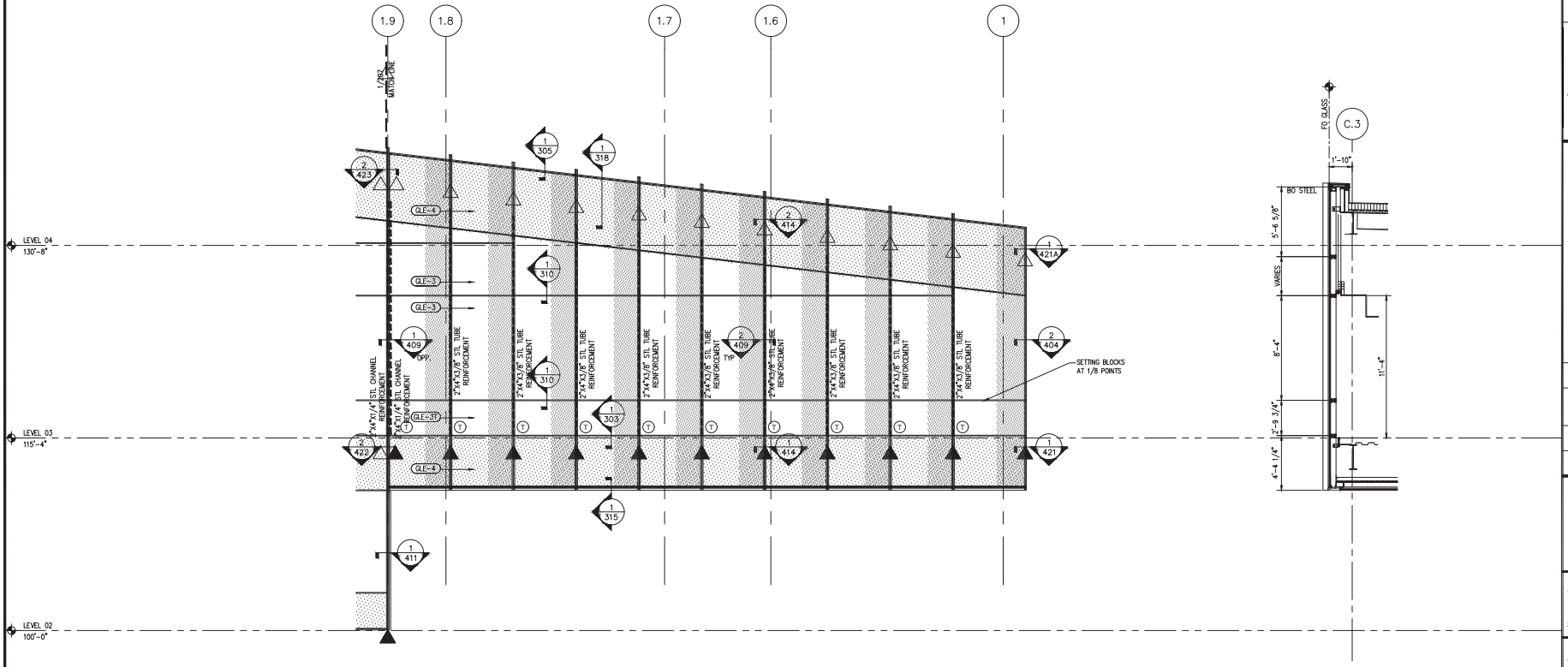

1 NORTH ELEVATION
Scale: 3/4"=1'-0"
EGS-1
COLOR: PEWTER

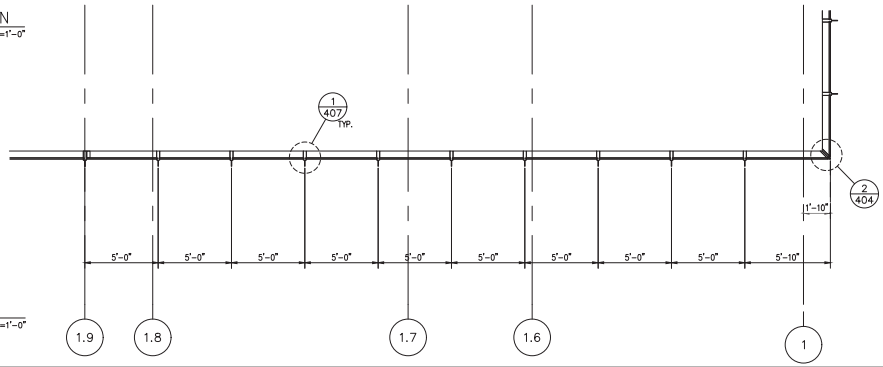

2 PLAN
Scale: 3/4"=1'-0"

3 SECTION
Scale: 3/4"=1'-0"
ARCH REF: 1/A0401

NGG LTD

NGG LTD, INCORPORATED
1850 Craigshire Road Suite 202
St. Louis, Missouri 63146

Tel 314-336-2515
Fax 314-336-2521

Professional Seal 02/28/2017

The seal on these plans are not valid with out electronic seal on cover.

Sub. No.	Rev. No.	Date	Drawn By	Submittal/Revision Description
4	3	11/28/16	IY	4TH SUBMISSION
3	2	11/8/16	IY	3RD SUBMISSION
2	1	10/19/16	IY	2ND SUBMISSION
1	-	8/10/16	IY	1ST SUBMISSION

Proprietary Notice

This drawing sheet and contents herein are property of NGG. Use of this drawing, contents or design concepts for purposes other than estimating, drawing preparation and/or manufacturing for NGG shall be cause for legal recourse by NGG.

Project Name
WEBSTER UNIVERSITY
Location
St. Louis, Missouri

Architect
CANNON DESIGN
Location
St. Louis, Missouri

Contractor
PARIC
Location
St. Louis, Missouri

Owner
WEBSTER UNIVERSITY
Location
St. Louis, Missouri

Drawn Date	Scale
08/10/16	AS NOTED

NGG Project No.

Drawing Title
EMBED TITLE SHEET

Drawn By	Sheet No.
IY	208

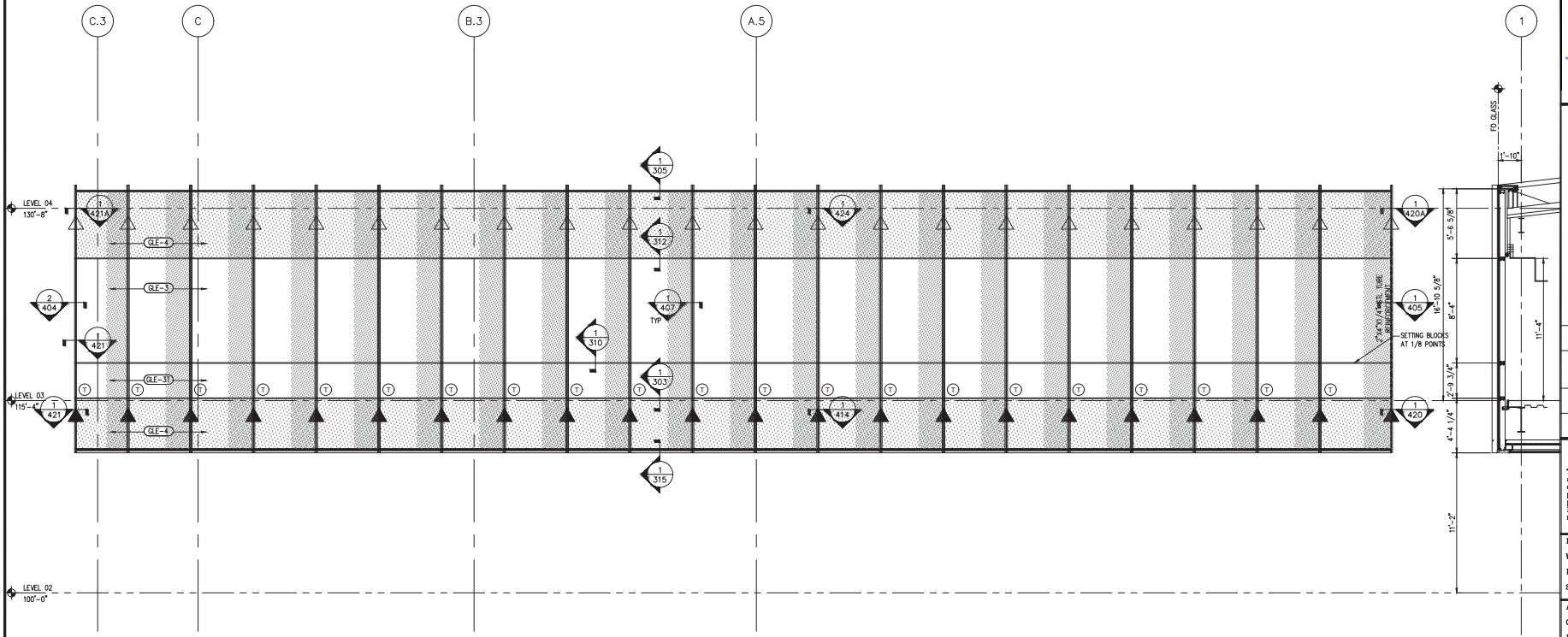

3 SECTION
Scale: 3/4"=1'-0"
ARCH REF: 1/A0406

1 WEST ELEVATION
Scale: 3/4"=1'-0"
EGS-1
COLOR: PEWTER

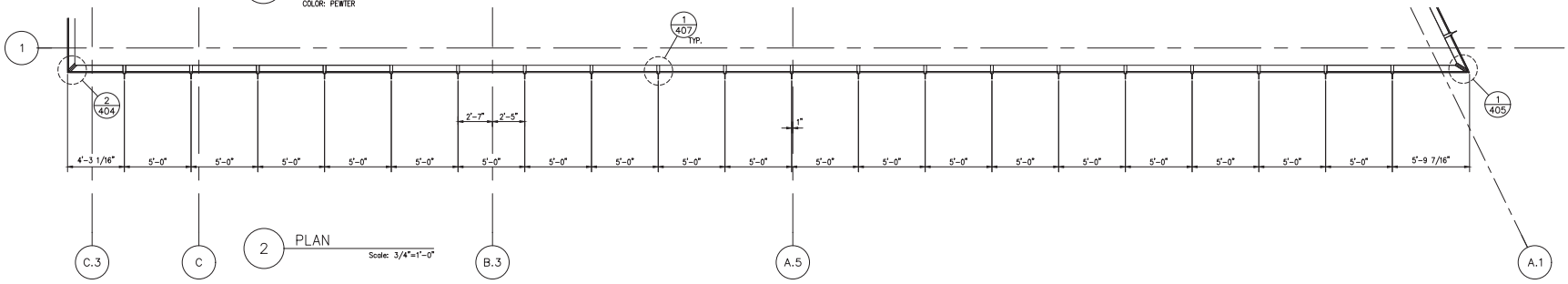

2 PLAN
Scale: 3/4"=1'-0"

NGG LTD

NGG LTD, INCORPORATED
1550 Craigshire Road Suite 202
St. Louis, Missouri 63146

Tel 314-336-2515
Fax 314-336-2521

Professional Seal 02/28/2017

STATE OF MISSOURI
STEWART P. FOKE
NUMBER
PE-24002
PROFESSIONAL ENGINEER

The seal on these plans are not valid with out electronic seal on cover.

Sub. No.	Rev. No.	Date	Drawn By	Submittal/Revision Description
4	3	11/28/16	IY	4TH SUBMISSION
3	2	11/8/16	IY	3RD SUBMISSION
2	1	10/19/16	IY	2ND SUBMISSION
1	-	8/10/16	IY	1ST SUBMISSION

Proprietary Notice

This drawing sheet and contents herein are property of NGG. Use of this drawing, contents or design concepts for purposes other than estimating, drawing preparation and/or manufacturing for NGG shall be cause for legal recourse by NGG.

Project Name
WEBSTER UNIVERSITY
Location
St. Louis, Missouri

Architect
CANNON DESIGN
Location
St. Louis, Missouri

Contractor
PARIC
Location
St. Louis, Missouri

Owner
WEBSTER UNIVERSITY
Location
St. Louis, Missouri

Drawn Date	Scale
08/10/16	AS NOTED

NGG Project No.

Drawing Title
EMBED TITLE SHEET

Drawn By	Sheet No.
IY	209

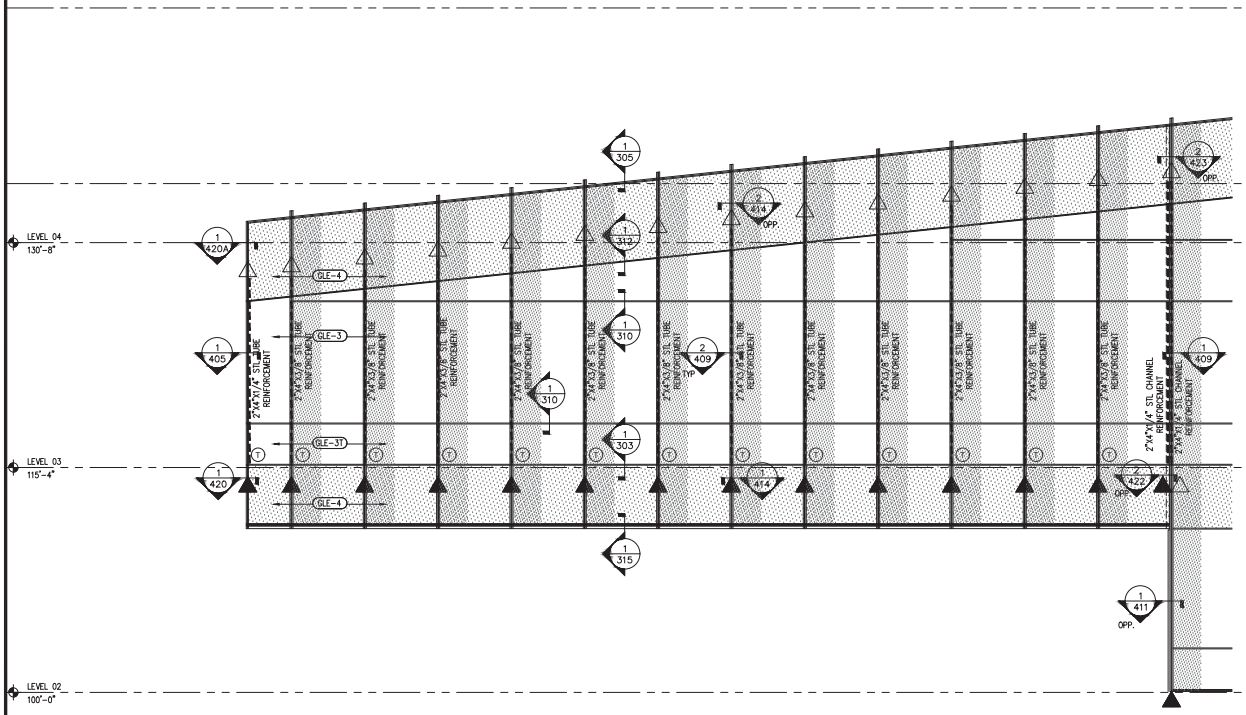

1 SOUTH ELEVATION
Scale: 3/4"=1'-0"
EGS-1
COLOR: PEWTER

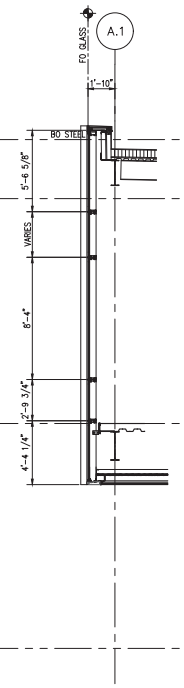

3 SECTION
Scale: 3/4"=1'-0"
ARCH REF: 1/A0405

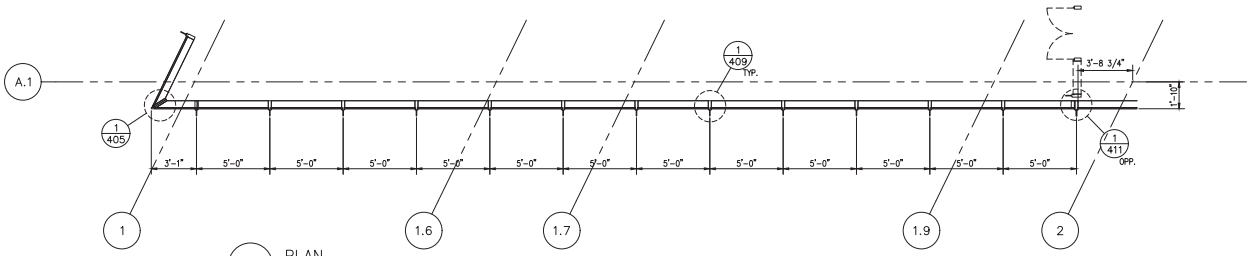

2 PLAN
Scale: 3/4"=1'-0"

NGG LTD

NGG LTD, INCORPORATED
1550 Craigshire Road Suite 202
St. Louis, Missouri 63146

Tel 314-336-2515
Fax 314-336-2521

Professional Seal 02/28/2017

The seal on these plans are not valid with out electronic seal on cover.

Sub. No.	Rev. No.	Date	Drawn By	Submittal/Revision Description
4	3	11/28/16	IY	4TH SUBMISSION
3	2	11/8/16	IY	3RD SUBMISSION
2	1	10/19/16	IY	2ND SUBMISSION
1	-	8/10/16	IY	1ST SUBMISSION

Proprietary Notice

This drawing sheet and contents herein are property of NGG. Use of this drawing, contents or design concepts for purposes other than estimating, drawing preparation and/or manufacturing for NGG shall be cause for legal recourse by NGG.

Project Name
WEBSTER UNIVERSITY
Location
St. Louis, Missouri

Architect
CANNON DESIGN
Location
St. Louis, Missouri

Contractor
PARIC
Location
St. Louis, Missouri

Owner
WEBSTER UNIVERSITY
Location
St. Louis, Missouri

Drawn Date	Scale
08/10/16	AS NOTED

NGG Project No.

Drawing Title
EMBED TITLE SHEET

Drawn By	Sheet No.
IY	210

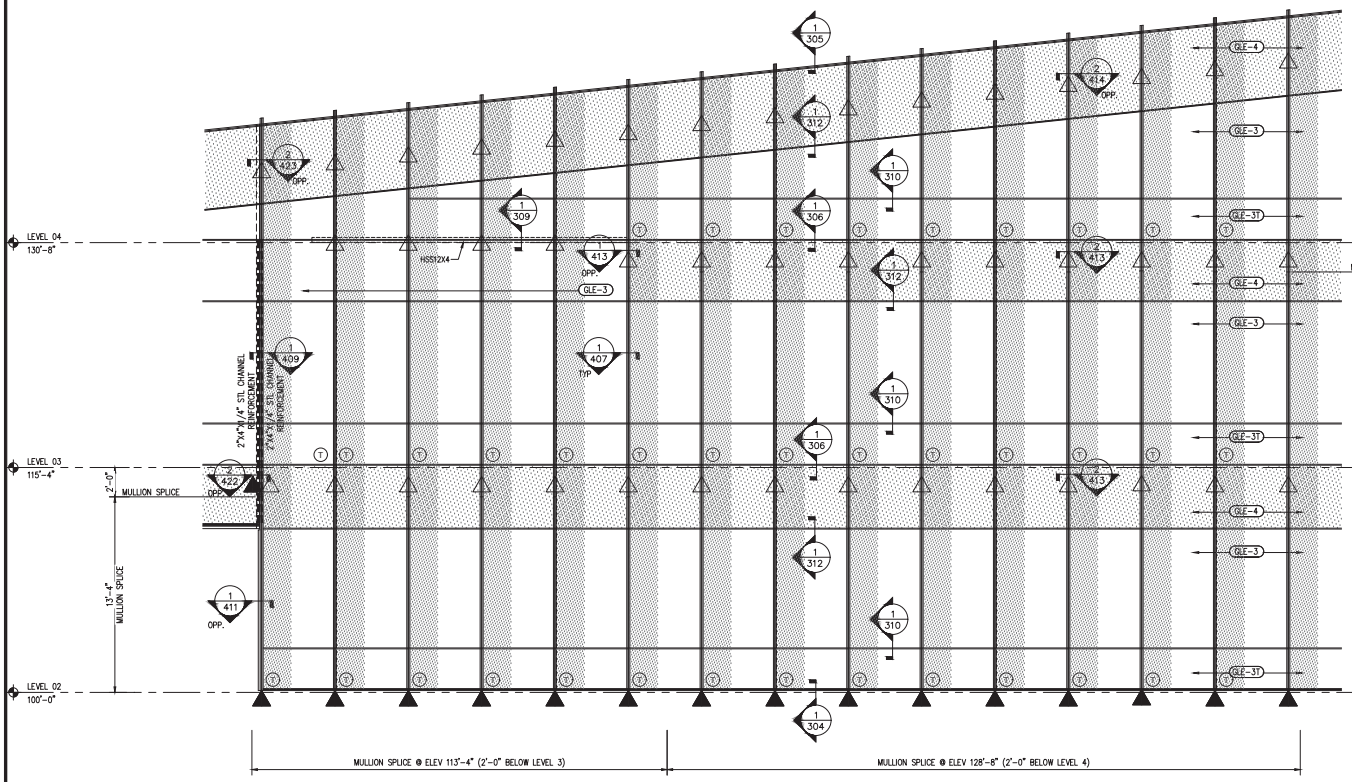

1 SOUTH ELEVATION
Scale: 3/4"=1'-0"
EGS-1
COLOR: PEWTER

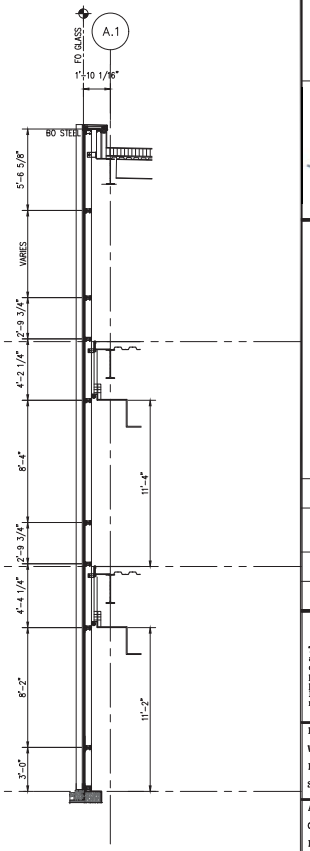

3 SECTION
Scale: 3/4"=1'-0"
ARCH REF: 2/A0405

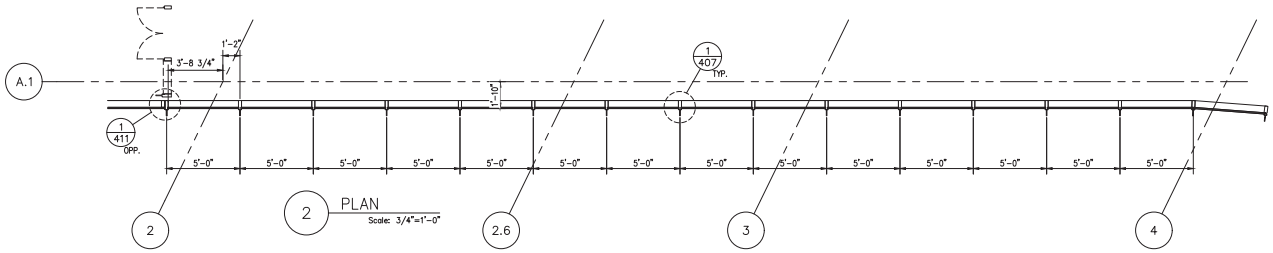

2 PLAN
Scale: 3/4"=1'-0"

NGG LTD

NGG LTD, INCORPORATED
1550 Craigshire Road Suite 202
St. Louis, Missouri 63146

Tel 314-336-2515
Fax 314-336-2521

Professional Seal 02/28/2017

STATE OF MISSOURI
STEWART P. ROSE
PE-24002
PROFESSIONAL ENGINEER

The seal on these plans are not valid with out electronic seal on cover.

Sub. No.	Rev. No.	Date	Drawn By	Submittal/Revision Description
4	3	11/28/16	IY	4TH SUBMISSION
3	2	11/8/16	IY	3RD SUBMISSION
2	1	10/19/16	IY	2ND SUBMISSION
1	-	8/10/16	IY	1ST SUBMISSION

Proprietary Notice

This drawing sheet and contents herein are property of NGG. Use of this drawing, contents or design concepts for purposes other than estimating, drawing preparation and/or manufacturing for NGG shall be cause for legal recourse by NGG.

Project Name
WEBSTER UNIVERSITY
Location
St. Louis, Missouri

Architect
CANNON DESIGN
Location
St. Louis, Missouri

Contractor
PARIC
Location
St. Louis, Missouri

Owner
WEBSTER UNIVERSITY
Location
St. Louis, Missouri

Drawn Date	Scale
08/10/16	AS NOTED

NGG Project No.

Drawing Title
EMBED TITLE SHEET

Drawn By	Sheet No.
IY	211

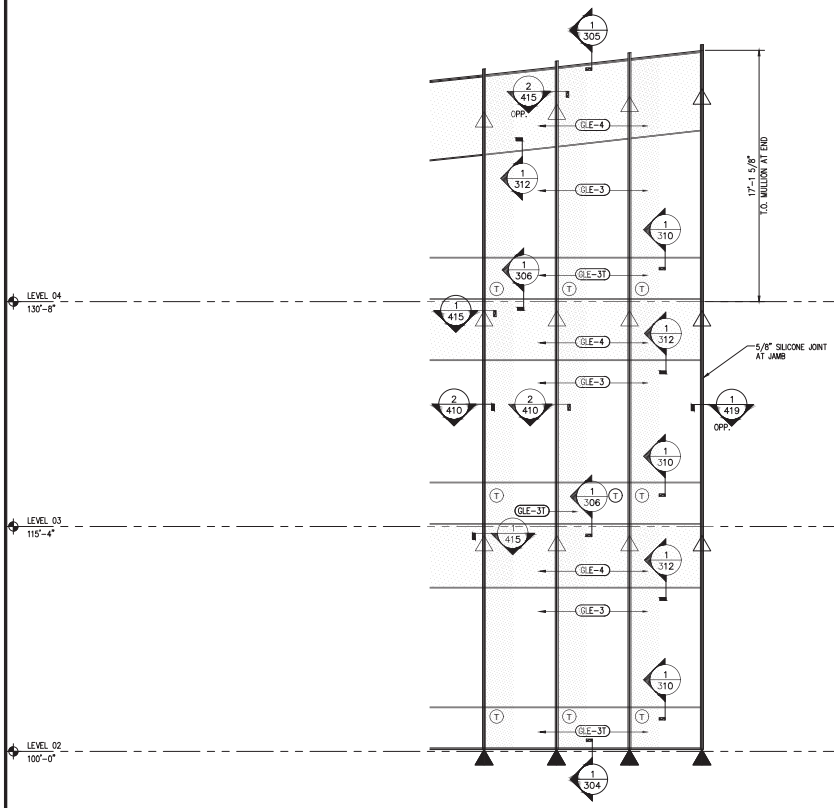

1 SOUTH ELEVATION
Scale: 3/4"=1'-0"

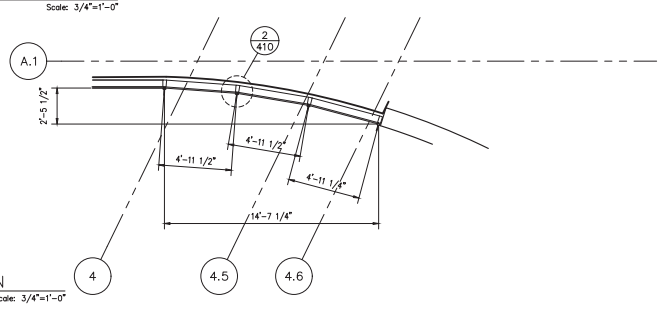

2 PLAN
Scale: 3/4"=1'-0"

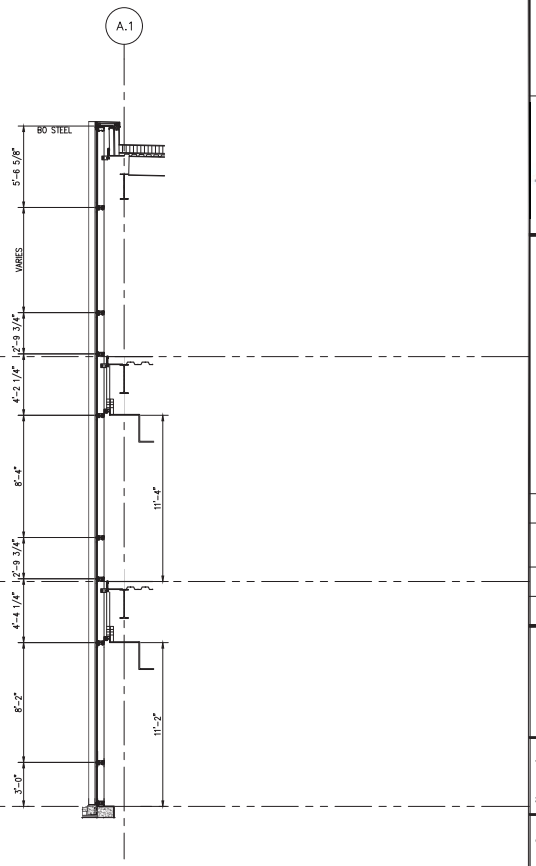

3 SECTION
Scale: 3/4"=1'-0"

NGG LTD

NGG LTD, INCORPORATED
1550 Craigshire Road Suite 202
St. Louis, Missouri 63146

Tel 314-336-2515
Fax 314-336-2521

Professional Seal 02/28/2017

The seal on these plans are not valid with out electronic seal on cover.

Sub. No.	Rev. No.	Date	Drawn By	Submittal/Revision Description
4	3	11/28/16	IY	4TH SUBMISSION
3	2	11/8/16	IY	3RD SUBMISSION
2	1	10/19/16	IY	2ND SUBMISSION
1	-	8/10/16	IY	1ST SUBMISSION

Proprietary Notice

This drawing sheet and contents herein are property of NGG. Use of this drawing, contents or design concepts for purposes other than estimating, drawing preparation and/or manufacturing for NGG shall be cause for legal recourse by NGG.

Project Name
WEBSTER UNIVERSITY
Location
St. Louis, Missouri

Architect
CANNON DESIGN
Location
St. Louis, Missouri

Contractor
PARIC
Location
St. Louis, Missouri

Owner
WEBSTER UNIVERSITY
Location
St. Louis, Missouri

Drawn Date	Scale
08/10/16	AS NOTED

NGG Project No.

Drawing Title
EMBED TITLE SHEET

Drawn By	Sheet No.
IY	212

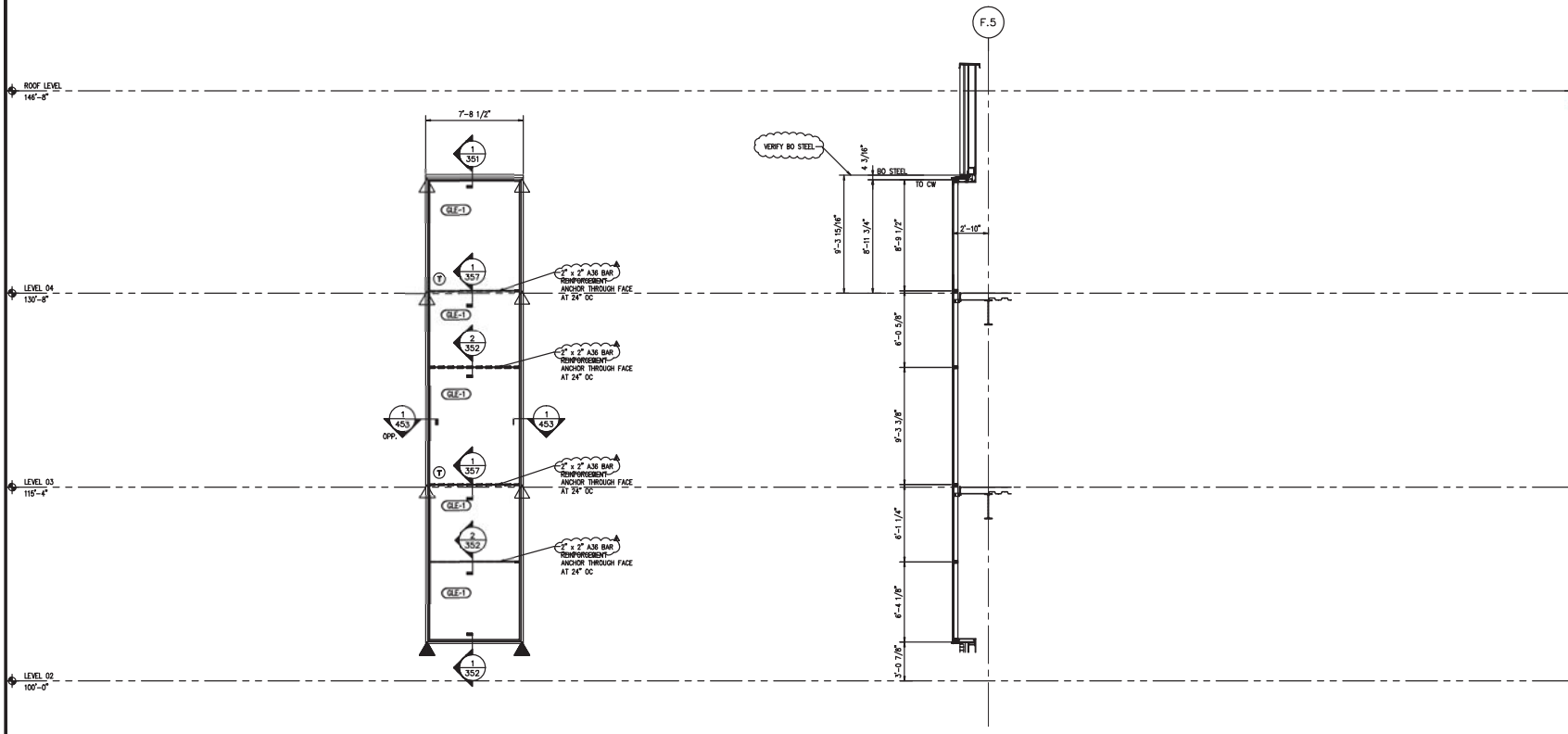

1 NORTH ELEVATION
EGS-3
COLOR: PEWTER
Scale: 3/4"=1'-0"

2 SECTION
Scale: 3/4"=1'-0"
ARCH REF: 4/A0402

NGG LTD

NGG LTD, INCORPORATED
1850 Craigshire Road Suite 202
St. Louis, Missouri 63146

Tel 314-336-2515
Fax 314-336-2521

Professional Seal 02/28/2017

STATE OF MISSOURI
STEWART P. JESKE
NUMBER PE-24002
PROFESSIONAL ENGINEER

The seal on these plans are not valid with out electronic seal on cover.

Sub. No.	Rev. No.	Date	Drawn By	Submittal/Revision Description
5	4	02/23/17	RG	5TH SUBMISSION
4	3	11/29/16	IY	4TH SUBMISSION
3	2	11/8/16	IY	3RD SUBMISSION
2	1	10/10/16	IY	2ND SUBMISSION
1	-	8/10/16	IY	1ST SUBMISSION

Proprietary Notice

This drawing sheet and contents herein are property of NGG. Use of this drawing, contents or design concepts for purposes other than estimating, drawing preparation and/or manufacturing for NGG shall be cause for legal recourse by NGG.

Project Name
WEBSTER UNIVERSITY
Location
St. Louis, Missouri

Architect
CANNON DESIGN
Location
St. Louis, Missouri

Contractor
PARIC
Location
St. Louis, Missouri

Owner
WEBSTER UNIVERSITY
Location
St. Louis, Missouri

Drawn Date	Scale
08/10/16	AS NOTED

NGG Project No.

Drawing Title
EMBED TITLE SHEET

Drawn By	Sheet No.
IY	213

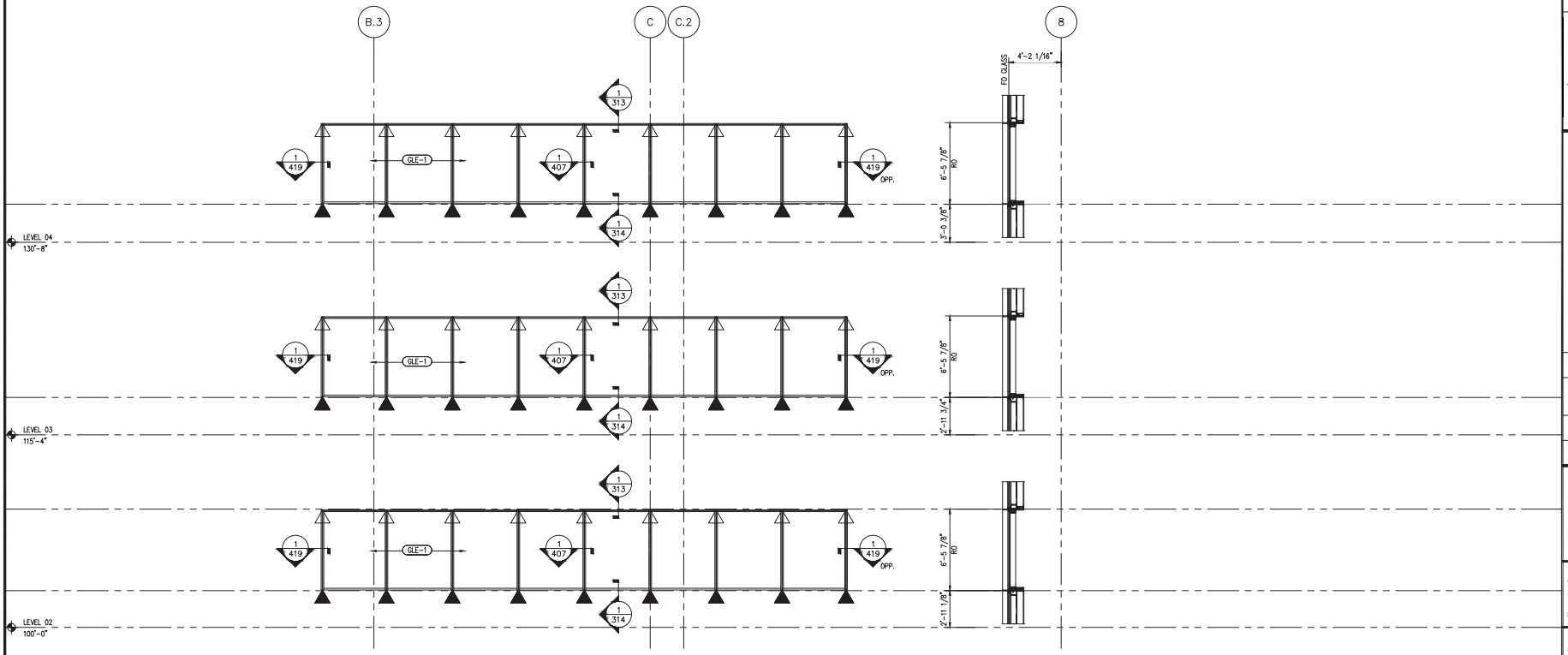

1 EAST ELEVATION
Scale: 3/4"=1'-0"
EGS-1
COLOR: PEWTER

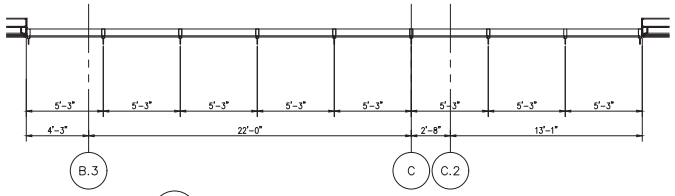

2 PLAN
Scale: 3/4"=1'-0"

NGG LTD

NGG LTD, INCORPORATED
1550 Craigshire Road Suite 202
St. Louis, Missouri 63146

Tel 314-336-2515
Fax 314-336-2521

Professional Seal 02/28/2017

The seal on these plans are not valid with out electronic seal on cover.

Sub. No.	Rev. No.	Date	Drawn By	Submittal/Revision Description
4	3	11/28/16	IY	4TH SUBMISSION
3	2	11/8/16	IY	3RD SUBMISSION
2	1	10/19/16	IY	2ND SUBMISSION
1	–	8/10/16	IY	1ST SUBMISSION

Proprietary Notice

This drawing sheet and contents herein are property of NGG. Use of this drawing, contents or design concepts for purposes other than estimating, drawing preparation and/or manufacturing for NGG shall be cause for legal recourse by NGG.

Project Name
WEBSTER UNIVERSITY
Location
St. Louis, Missouri

Architect
CANNON DESIGN
Location
St. Louis, Missouri

Contractor
PARIC
Location
St. Louis, Missouri

Owner
WEBSTER UNIVERSITY
Location
St. Louis, Missouri

Drawn Date	Scale
08/10/16	AS NOTED

NGG Project No.

Drawing Title
EMBED TITLE SHEET

Drawn By	Sheet No.
IY	214

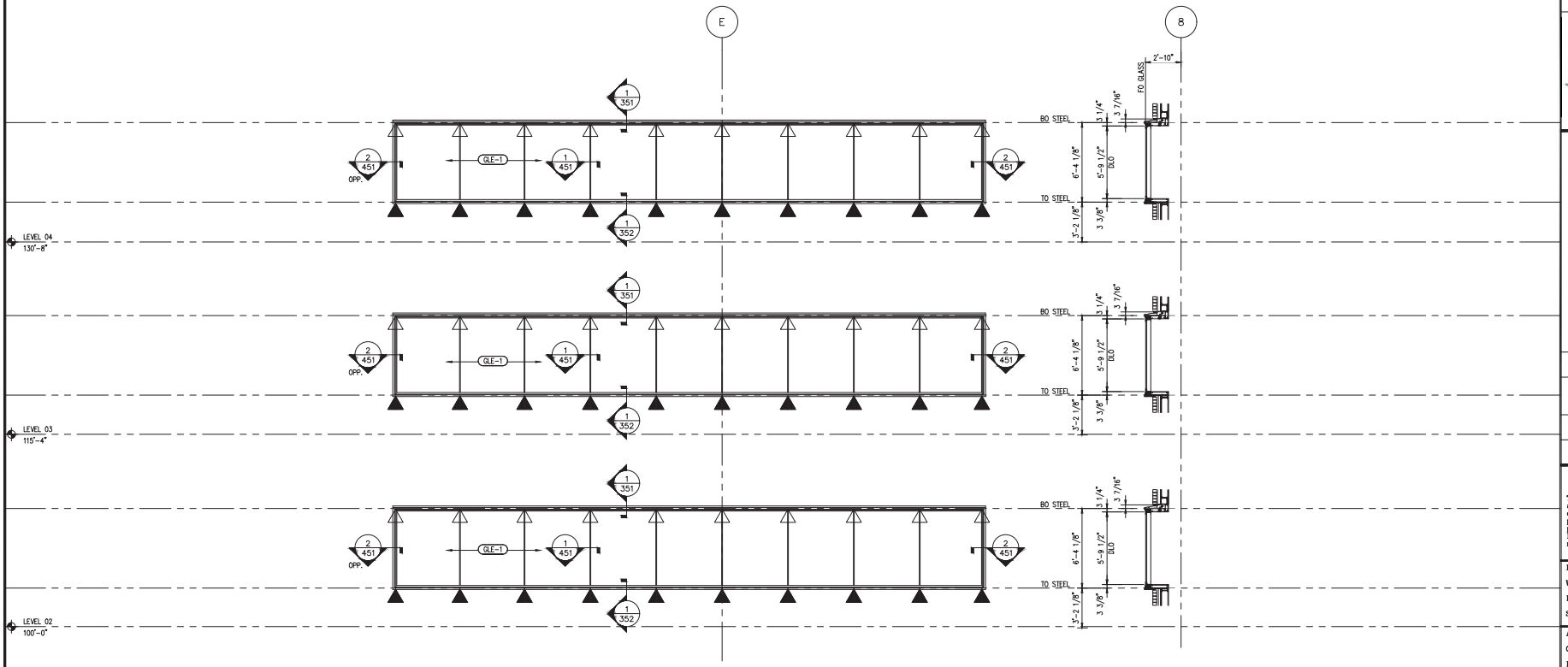

1 EAST ELEVATION
Scale: 3/4"=1'-0"
EGS-3
COLOR: PEWTER

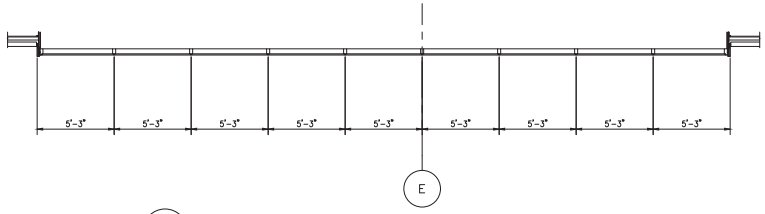

2 PLAN
Scale: 3/4"=1'-0"

NGG LTD

NGG LTD, INCORPORATED
1550 Craigshire Road Suite 202
St. Louis, Missouri 63146

Tel 314-336-2515
Fax 314-336-2521

Professional Seal 02/28/2017

STATE OF MISSOURI
STEWART P. ASKE
PE-24002
PROFESSIONAL ENGINEER

The seal on these plans are not valid with out electronic seal on cover.

Sub. No.	Rev. No.	Date	Drawn By	Submittal/Revision Description
4	3	11/28/16	IY	4TH SUBMISSION
3	2	11/8/16	IY	3RD SUBMISSION
2	1	10/19/16	IY	2ND SUBMISSION
1	-	8/10/16	IY	1ST SUBMISSION

Proprietary Notice

This drawing sheet and contents herein are property of NGG. Use of this drawing, contents or design concepts for purposes other than estimating, drawing preparation and/or manufacturing for NGG shall be cause for legal recourse by NGG.

Project Name
WEBSTER UNIVERSITY
Location
St. Louis, Missouri

Architect
CANNON DESIGN
Location
St. Louis, Missouri

Contractor
PARIC
Location
St. Louis, Missouri

Owner
WEBSTER UNIVERSITY
Location
St. Louis, Missouri

Drawn Date	Scale
08/10/16	AS NOTED

NGG Project No.

Drawing Title
EMBED TITLE SHEET

Drawn By	Sheet No.
IY	215

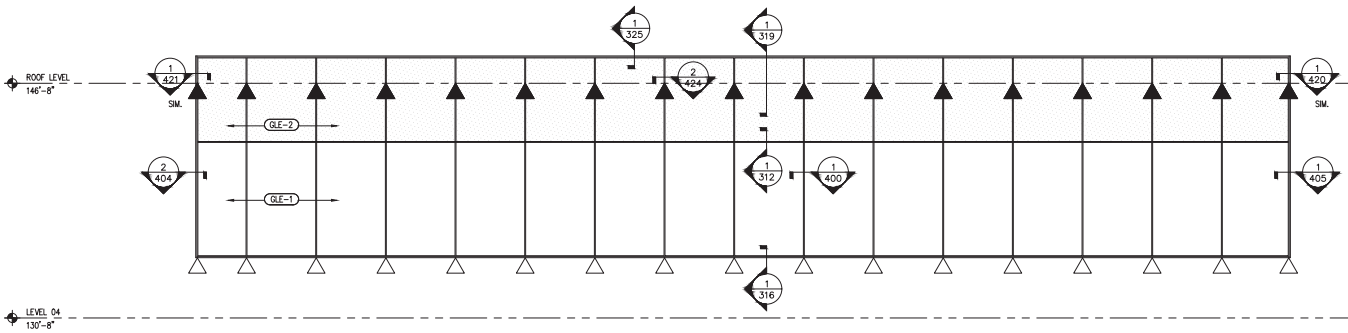

1 WEST ELEVATION
Scale: 3/4"=1'-0"
EGS-2
COLOR: PEWTER

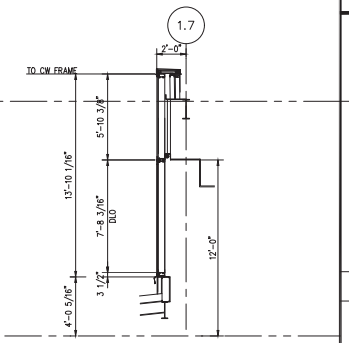

2 SECTION
Scale: 3/4"=1'-0"
ARCH REF: 1/A0406

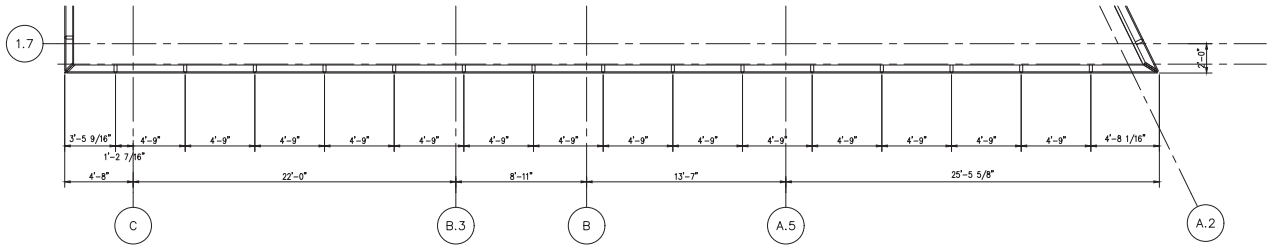

2 PLAN
Scale: 3/4"=1'-0"

NGG LTD

NGG LTD, INCORPORATED
1550 Craigshire Road Suite 202
St. Louis, Missouri 63146

Tel 314-336-2515
Fax 314-336-2521

Professional Seal 02/28/2017

The seal on these plans are not valid with out electronic seal on cover.

Sub. No.	Rev. No.	Date	Drawn By	Submittal/Revision Description
4	3	11/29/16	IY	4TH SUBMISSION
3	2	11/8/16	IY	3RD SUBMISSION
2	1	10/19/16	IY	2ND SUBMISSION
1	-	8/10/16	IY	1ST SUBMISSION

Proprietary Notice

This drawing sheet and contents herein are property of NGG. Use of this drawing, contents or design concepts for purposes other than estimating, drawing preparation and/or manufacturing for NGG shall be cause for legal recourse by NGG.

Project Name
WEBSTER UNIVERSITY
Location
St. Louis, Missouri

Architect
CANNON DESIGN
Location
St. Louis, Missouri

Contractor
PARIC
Location
St. Louis, Missouri

Owner
WEBSTER UNIVERSITY
Location
St. Louis, Missouri

Drawn Date	Scale
08/10/16	AS NOTED

NGG Project No.

Drawing Title
EMBED TITLE SHEET

Drawn By	Sheet No.
IY	216

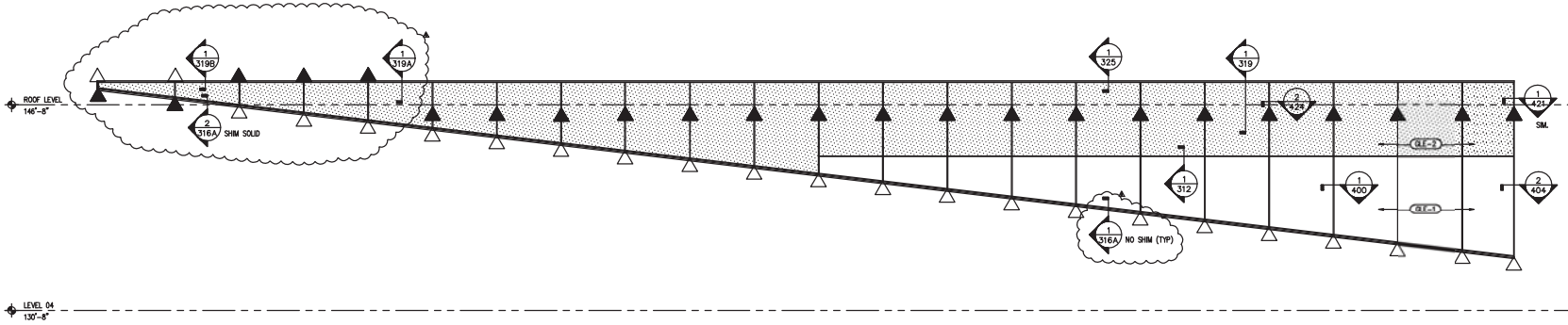

1 NORTH ELEVATION
Scale: 3/4"=1'-0"
EGS-2
COLOR: PEWTER

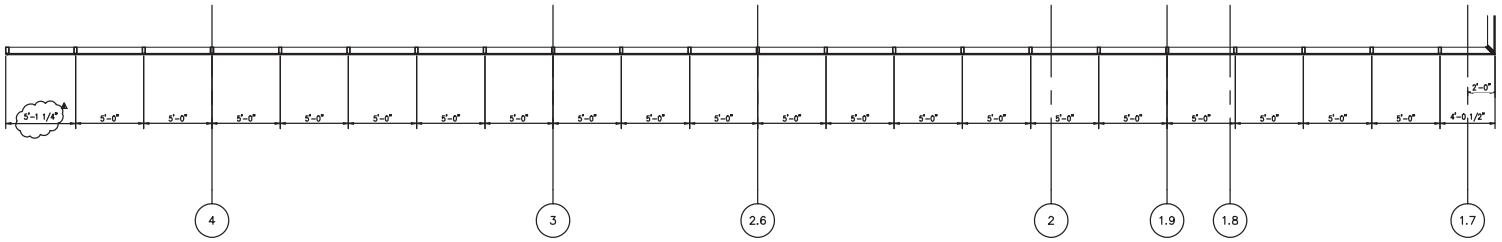

2 PLAN
Scale: 3/4"=1'-0"

NGG LTD

NGG LTD, INCORPORATED
1850 Craigshire Road Suite 202
St. Louis, Missouri 63146

Tel 314-336-2515
Fax 314-336-2521

Professional Seal 02/28/2017

The seal on these plans are not valid with out electronic seal on cover

Sub. No.	Rev. No.	Date	Drawn By	Submittal/Revision Description
5	4	02/28/17	RS	5TH SUBMISSION
4	3	11/28/16	IY	4TH SUBMISSION
3	2	11/8/16	IY	3RD SUBMISSION
2	1	10/10/16	IY	2ND SUBMISSION
1	-	8/10/16	IY	1ST SUBMISSION

Proprietary Notice

This drawing sheet and contents herein are property of NGG. Use of this drawing, contents or design concepts for purposes other than estimating, drawing preparation and/or manufacturing for NGG shall be cause for legal recourse by NGG.

Project Name
WEBSTER UNIVERSITY
Location
St. Louis, Missouri

Architect
CANNON DESIGN
Location
St. Louis, Missouri

Contractor
PARIC
Location
St. Louis, Missouri

Owner
WEBSTER UNIVERSITY
Location
St. Louis, Missouri

Drawn Date	Scale
08/10/16	AS NOTED

NGG Project No.

Drawing Title
EMBED TITLE SHEET

Drawn By	Sheet No.
IY	217

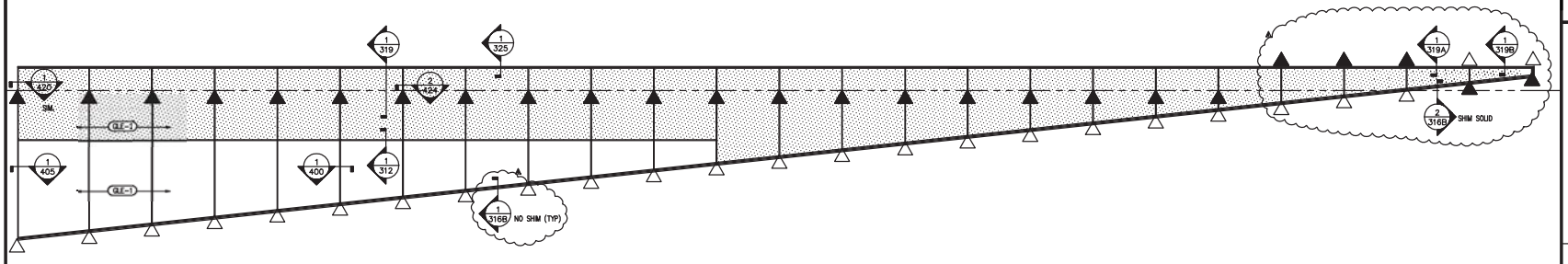

1 SOUTH ELEVATION
EGS-2
COLOR: PEWTER
Scale: 3/4"=1'-0"

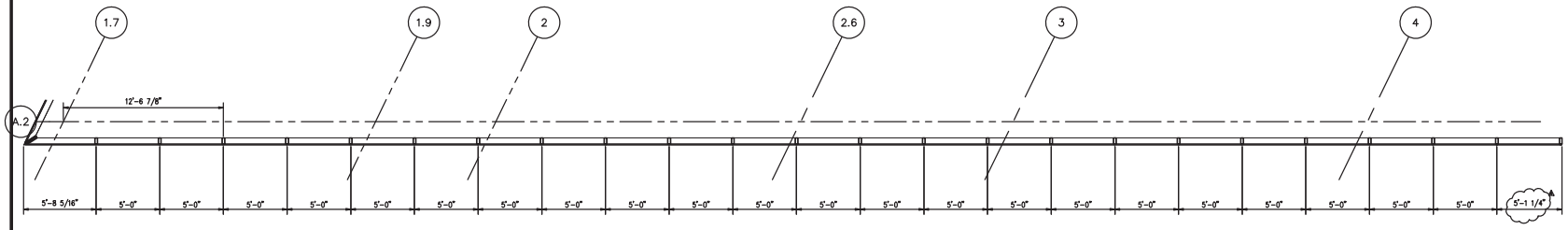

2 PLAN
Scale: 3/4"=1'-0"

NGG LTD

NGG LTD, INCORPORATED
1850 Craigshire Road Suite 202
St. Louis, Missouri 63146

Tel 314-336-2515
Fax 314-336-2521

Professional Seal 02/28/2017

The seals on these plans are not valid with out electronic seal on cover

Sub. No.	Rev. No.	Date	Drawn By	Submittal/Revision Description
5	4	02/23/17	RS	5TH SUBMISSION
4	3	11/29/16	IY	4TH SUBMISSION
3	2	11/8/16	IY	3RD SUBMISSION
2	1	10/10/16	IY	2ND SUBMISSION
1	-	8/10/16	IY	1ST SUBMISSION

Proprietary Notice

This drawing sheet and contents herein are property of NGG. Use of this drawing, contents or design concepts for purposes other than estimating, drawing preparation and/or manufacturing for NGG shall be cause for legal recourse by NGG.

Project Name
WEBSTER UNIVERSITY
Location
St. Louis, Missouri

Architect
CANNON DESIGN
Location
St. Louis, Missouri

Contractor
PARIC
Location
St. Louis, Missouri

Owner
WEBSTER UNIVERSITY
Location
St. Louis, Missouri

Drawn Date	Scale
08/10/16	AS NOTED

NGG Project No.

Drawing Title
EMBED TITLE SHEET

Drawn By	Sheet No.
IY	218

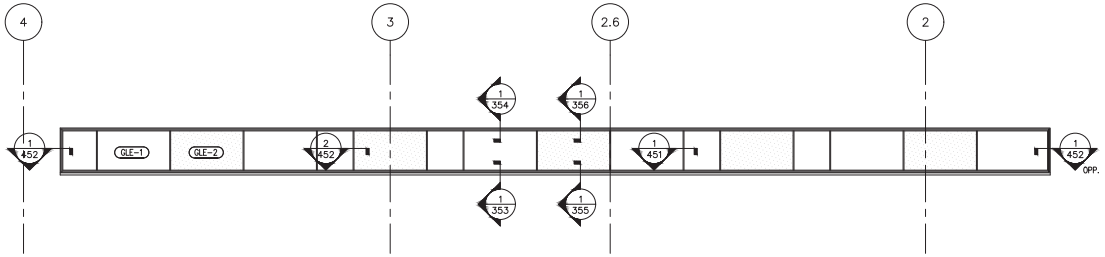

1 NORTH ELEVATION
Scale: 3/4"=1'-0"
EGS-3A
COLOR: BLACK

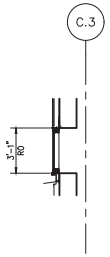

3 SECTION
Scale: 3/4"=1'-0"

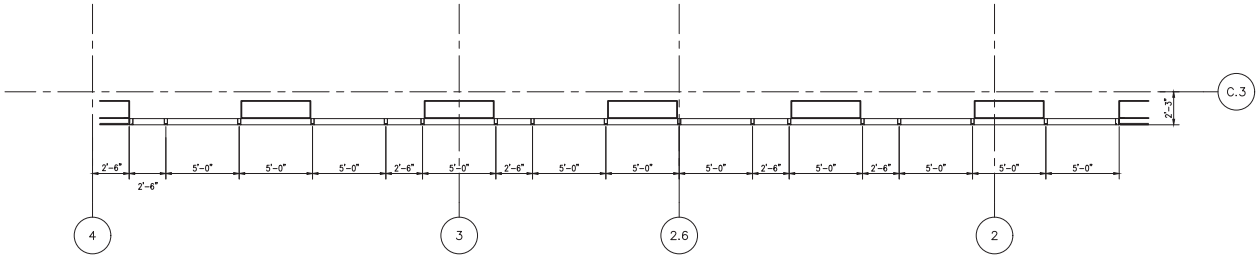

2 PLAN
Scale: 3/4"=1'-0"

NGG LTD

NGG LTD, INCORPORATED
1550 Craigshire Road Suite 202
St. Louis, Missouri 63146

Tel 314-336-2515
Fax 314-336-2521

Professional Seal 02/28/2017

The seal on these plans are not valid with out electronic seal on cover.

Sub. No.	Rev. No.	Date	Drawn By	Submittal/Revision Description
4	3	11/28/16	IY	4TH SUBMISSION
3	2	11/8/16	IY	3RD SUBMISSION
2	1	10/19/16	IY	2ND SUBMISSION
1	-	8/10/16	IY	1ST SUBMISSION

Proprietary Notice

This drawing sheet and contents herein are property of NGG. Use of this drawing, contents or design concepts for purposes other than estimating, drawing preparation and/or manufacturing for NGG shall be cause for legal recourse by NGG.

Project Name
WEBSTER UNIVERSITY
Location
St. Louis, Missouri

Architect
CANNON DESIGN
Location
St. Louis, Missouri

Contractor
PARIC
Location
St. Louis, Missouri

Owner
WEBSTER UNIVERSITY
Location
St. Louis, Missouri

Drawn Date	Scale
08/10/16	AS NOTED

NGG Project No.

Drawing Title
EMBED TITLE SHEET

Drawn By	Sheet No.
IY	219

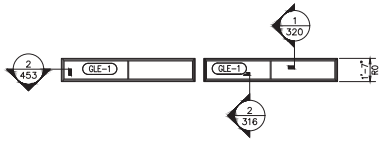

1 ELEVATION AT MONITOR
Scale: 3/4"=1'-0"
EGS-3
COLOR: PEWTER

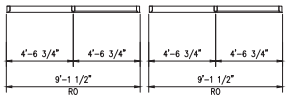

2 PLAN
Scale: 3/4"=1'-0"

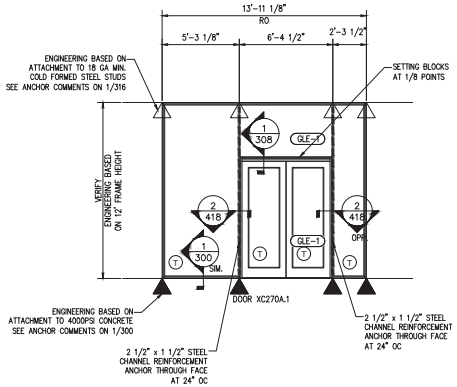

3 ENTRANCE ELEVATION
Scale: 3/4"=1'-0"
EGS-2
COLOR: MATCH EXISTING EAB
SYSTEMS COLOR

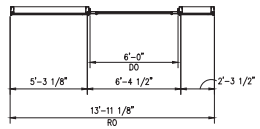

4 PLAN
Scale: 3/4"=1'-0"

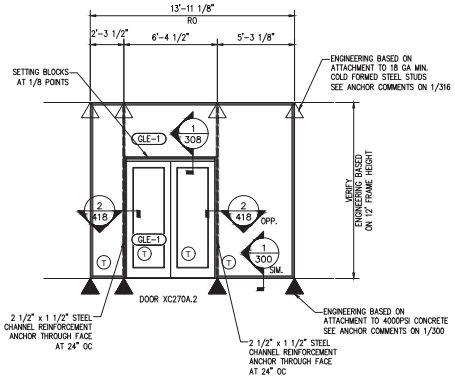

5 ENTRANCE ELEVATION
Scale: 3/4"=1'-0"
EGS-2
COLOR: MATCH EXISTING EAB
SYSTEMS COLOR

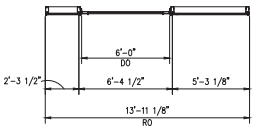

6 PLAN
Scale: 3/4"=1'-0"

NGG LTD

NGG LTD, INCORPORATED
1550 Craigshire Road Suite 202
St. Louis, Missouri 63146

Tel 314-336-2515
Fax 314-336-2521

Professional Seal 02/28/2017

The seal on these plans are not valid with out electronic seal on cover.

Sub. No.	Rev. No.	Date	Drawn By	Submittal/Revision Description
4	3	11/28/16	IY	4TH SUBMISSION
3	2	11/8/16	IY	3RD SUBMISSION
2	1	10/19/16	IY	2ND SUBMISSION
1	-	8/10/16	IY	1ST SUBMISSION

Proprietary Notice

This drawing sheet and contents herein are property of NGG. Use of this drawing, contents or design concepts for purposes other than estimating, drawing preparation and/or manufacturing for NGG shall be cause for legal recourse by NGG.

Project Name
WEBSTER UNIVERSITY
Location
St. Louis, Missouri

Architect
CANNON DESIGN
Location
St. Louis, Missouri

Contractor
PARIC
Location
St. Louis, Missouri

Owner
WEBSTER UNIVERSITY
Location
St. Louis, Missouri

Drawn Date	Scale
08/10/16	AS NOTED

NGG Project No.

Drawing Title
EMBED TITLE SHEET

Drawn By	Sheet No.
IY	220

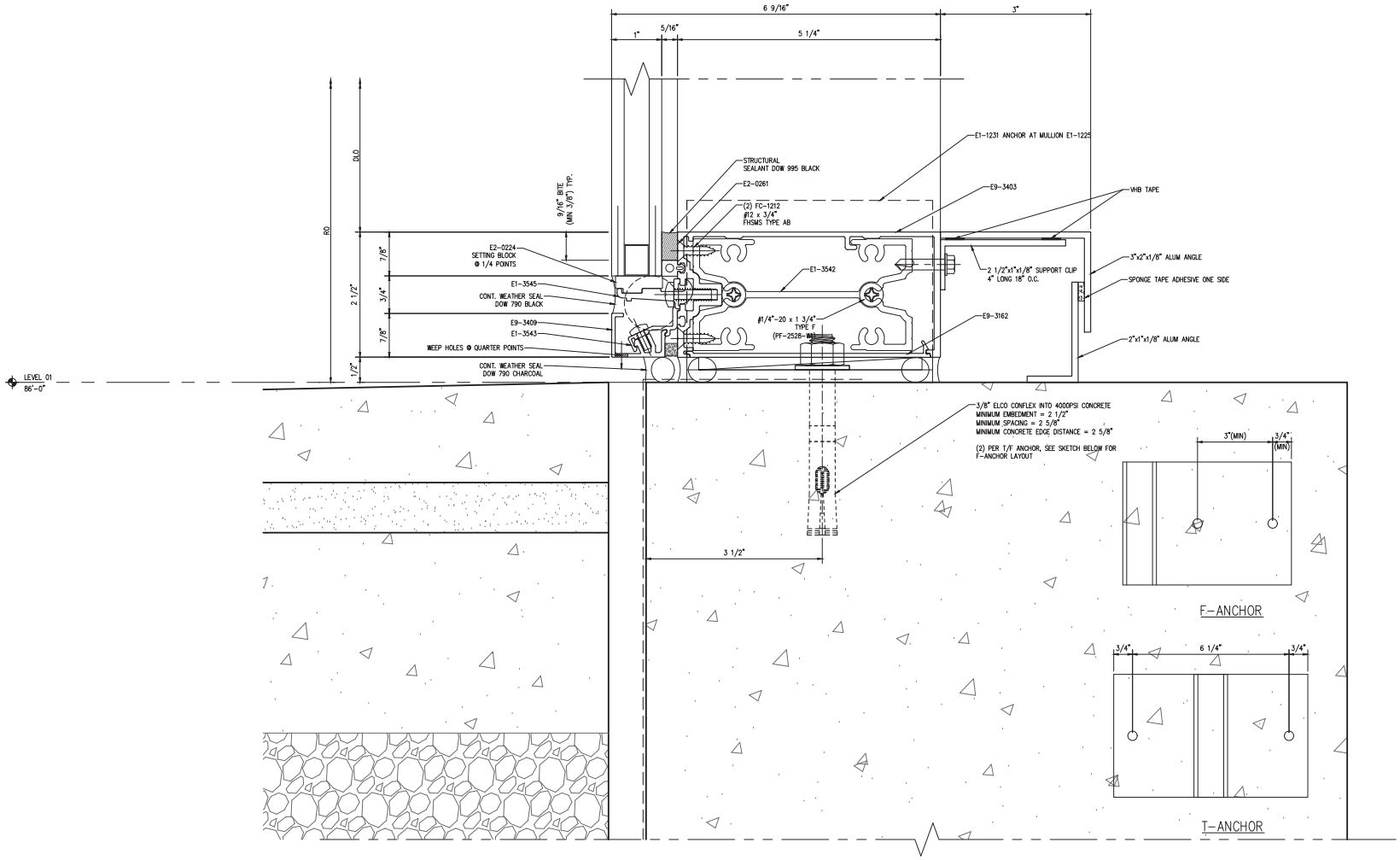

1 SILL DETAIL

Scale: 1:1

NGG LTD

NGG LTD, INCORPORATED
1550 Craigshire Road Suite 202
St. Louis, Missouri 63146

Tel 314-336-2515
Fax 314-336-2521

Professional Seal 02/28/2017

STATE OF MISSOURI
STEWART P. FOKE
PE-24002
PROFESSIONAL ENGINEER

The seal on these plans are not valid with out electronic seal on cover.

Sub. No.	Rev. No.	Date	Drawn By	Submittal/Revision Description
4	3	11/28/16	IY	4TH SUBMISSION
3	2	11/8/16	IY	3RD SUBMISSION
2	1	10/19/16	IY	2ND SUBMISSION
1	-	8/10/16	IY	1ST SUBMISSION

Proprietary Notice

This drawing sheet and contents herein are property of NGG. Use of this drawing, contents or design concepts for purposes other than estimating, drawing preparation and/or manufacturing for NGG shall be cause for legal recourse by NGG.

Project Name
WEBSTER UNIVERSITY
Location
St. Louis, Missouri

Architect
CANNON DESIGN
Location
St. Louis, MO

Contractor
PARIC
Location
St. Louis, Missouri

Owner
WEBSTER UNIVERSITY
Location
St. Louis, Missouri

Drawn Date	Scale
8/10/16	AS NOTED

NGG Project No.

Drawing Title
DETAILS

Drawn By	Sheet No.
IY	300

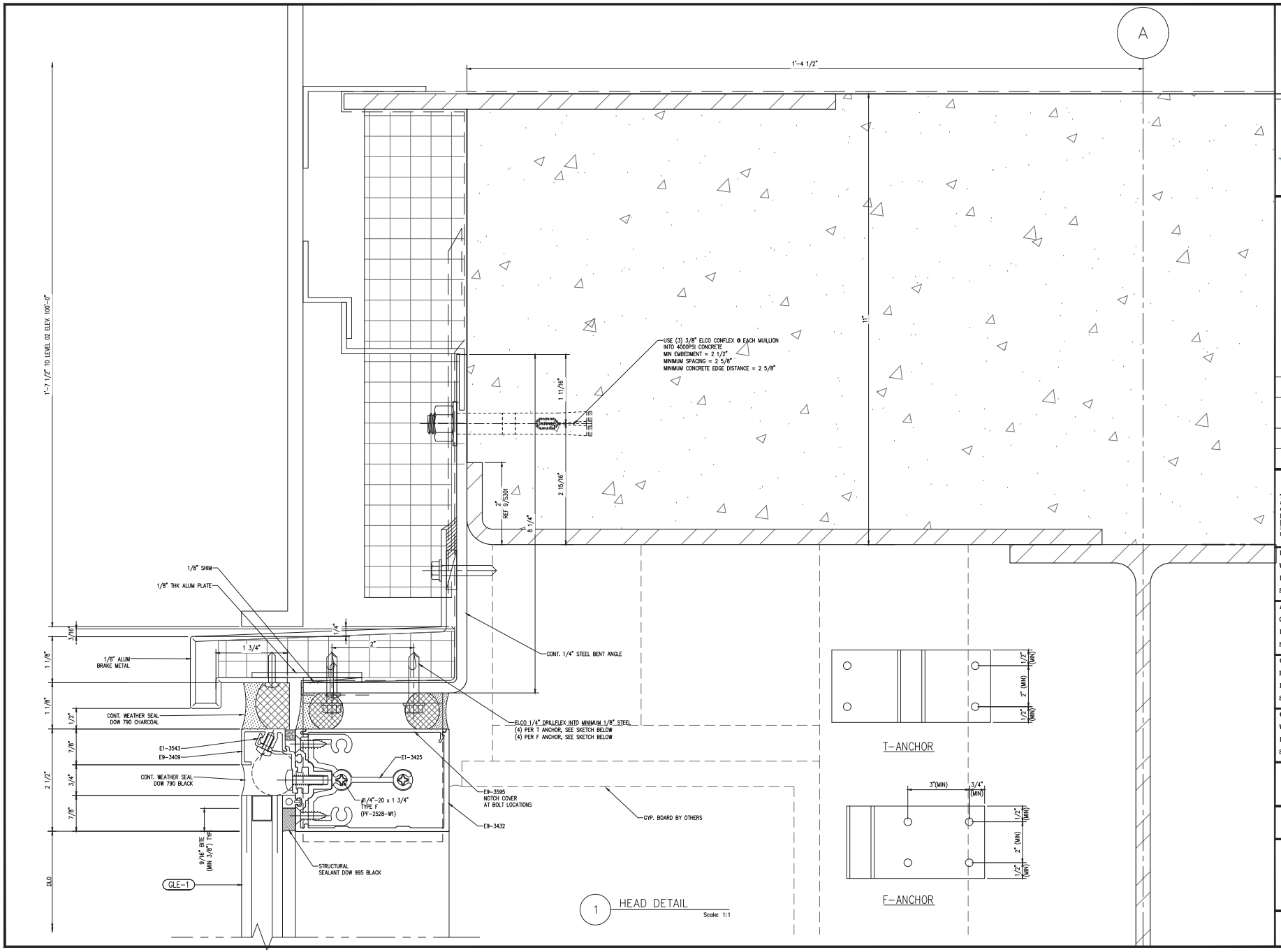

NGG LTD

NGG LTD, INCORPORATED
1850 Craigshire Road Suite 202
St. Louis, Missouri 63146

Tel 314-336-2515
Fax 314-336-2521

Professional Seal 02/28/2017

STATE OF MISSOURI
STEWART P. FOKE
PE-24002
PROFESSIONAL ENGINEER

The seal on these plans are not valid with out electronic seal on cover.

Sub. No.	Rev. No.	Date	Drawn. By	Submittal/Revision Description
4	3	11/28/16	IY	4TH SUBMISSION
3	2	11/8/16	IY	3RD SUBMISSION
2	1	10/19/16	IY	2ND SUBMISSION
1	-	8/10/16	IY	1ST SUBMISSION

Proprietary Notice

This drawing sheet and contents herein are property of NGG. Use of this drawing, contents or design concepts for purposes other than estimating, drawing preparation and/or manufacturing for NGG shall be cause for legal recourse by NGG.

Project Name
WEBSTER UNIVERSITY
Location
St. Louis, Missouri

Architect
CANNON DESIGN
Location
St. Louis, MO

Contractor
PARIC
Location
St. Louis, Missouri

Owner
WEBSTER UNIVERSITY
Location
St. Louis, Missouri

Drawn Date	Scale
8/10/16	AS NOTED

NGG Project No.

Drawing Title
DETAILS

Drawn By	Sheet No.
IY	301

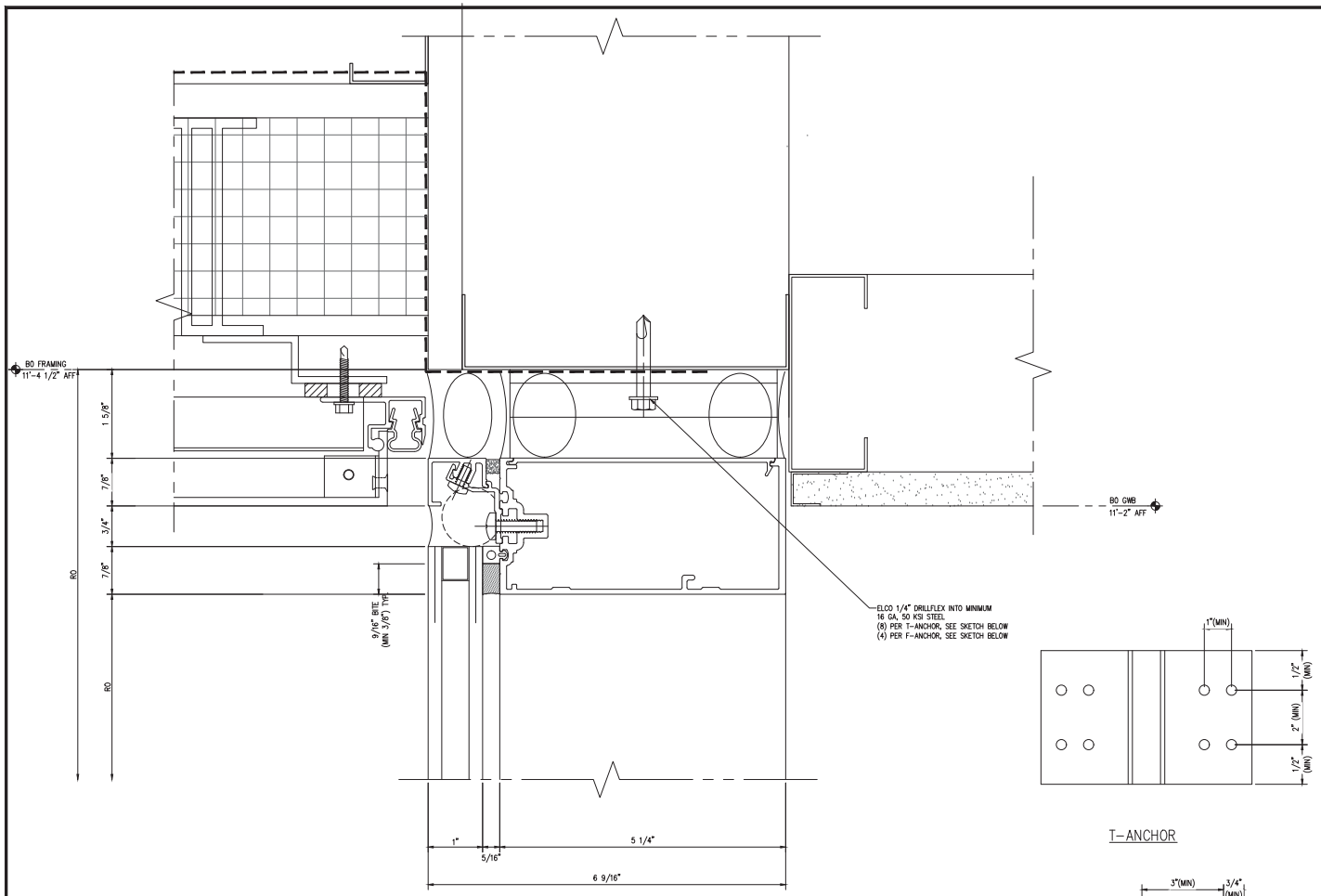

1 HEAD DETAIL

Scale: 1:1

REF. 8/A0454

T-ANCHOR

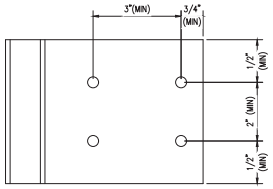

F-ANCHOR

NGG LTD

NGG LTD, INCORPORATED
1850 Craigshire Road Suite 202
St. Louis, Missouri 63146

Tel 314-336-2515
Fax 314-336-2521

Professional Seal 02/28/2017

STATE OF MISSOURI
STEWART P. FISKE
PE-24002
PROFESSIONAL ENGINEER

The seal on these plans are not valid with out electronic seal on cover.

Sub. No.	Rev. No.	Date	Drawn. By	Submittal/Revision Description
4	3	11/29/16	IY	4TH SUBMISSION
3	2	11/8/16	IY	3RD SUBMISSION
2	1	10/19/16	IY	2ND SUBMISSION
1	-	8/10/16	IY	1ST SUBMISSION

Proprietary Notice

This drawing sheet and contents herein are property of NGG. Use of this drawing, contents or design concepts for purposes other than estimating, drawing preparation and/or manufacturing for NGG shall be cause for legal recourse by NGG.

Project Name
WEBSTER UNIVERSITY
Location
St. Louis, Missouri

Architect
CANNON DESIGN
Location
St. Louis, MO

Contractor
PARIC
Location
St. Louis, Missouri

Owner
WEBSTER UNIVERSITY
Location
St. Louis, Missouri

Drawn Date	Scale
8/10/16	AS NOTED

NGG Project No.

Drawing Title
DETAILS

Drawn By	Sheet No.
IY	302

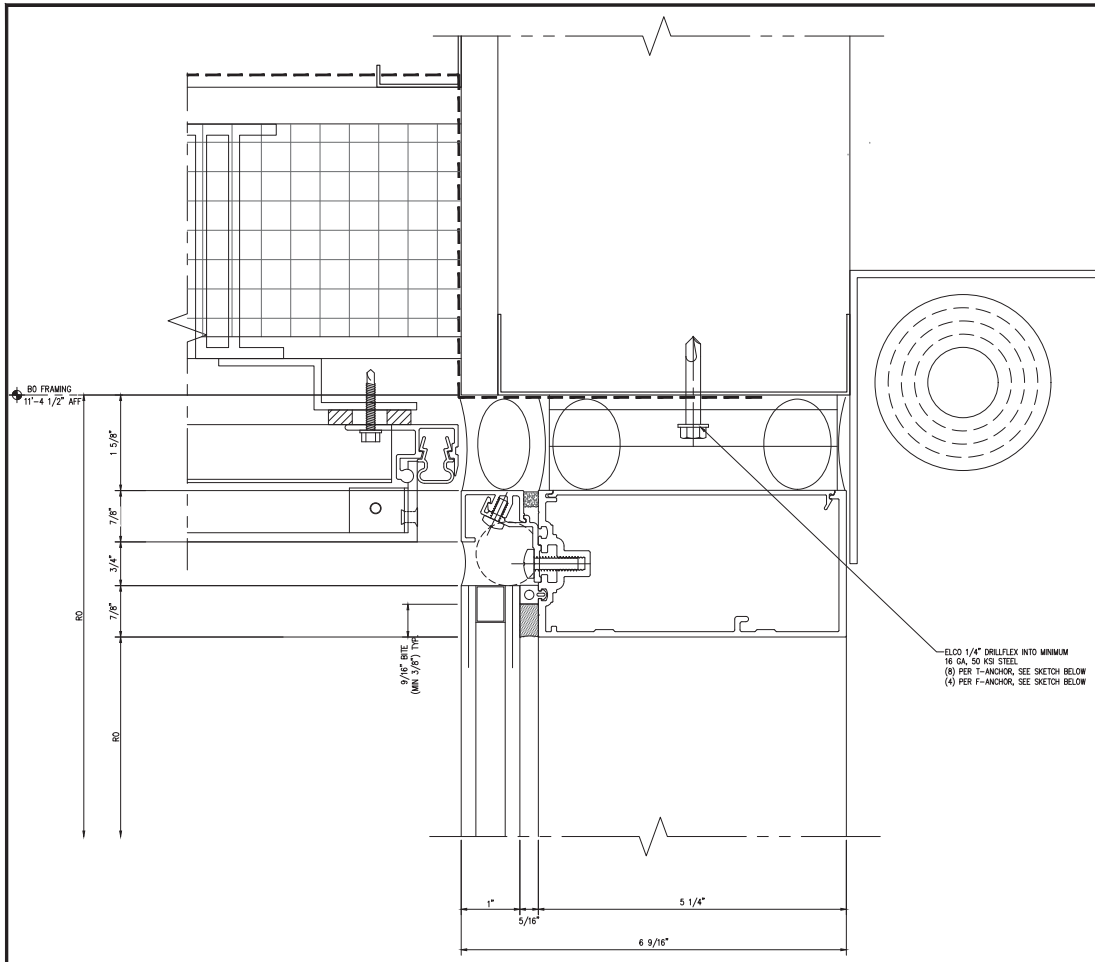

1 HEAD DETAIL

Scale: 1:1

REF. 8/A0454

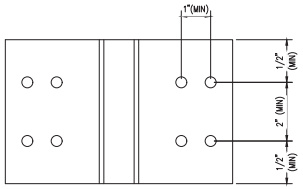

T-ANCHOR

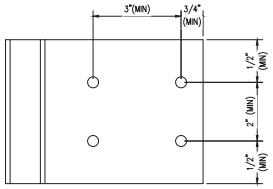

F-ANCHOR

NGG LTD

NGG LTD, INCORPORATED
1550 Craigshire Road Suite 202
St. Louis, Missouri 63146

Tel 314-336-2515
Fax 314-336-2521

Professional Seal 02/28/2017

STATE OF MISSOURI
STEWART P. FOSE
NUMBER
PE-24002
PROFESSIONAL ENGINEER

The seal on these plans are not valid with out electronic seal on cover.

Sub. No.	Rev. No.	Date	Drawn. By	Submittal/Revision Description
4	3	11/28/16	IY	4TH SUBMISSION
3	2	11/8/16	IY	3RD SUBMISSION
2	1	10/19/16	IY	2ND SUBMISSION
1	-	8/10/16	IY	1ST SUBMISSION

Proprietary Notice

This drawing sheet and contents herein are property of NGG. Use of this drawing, contents or design concepts for purposes other than estimating, drawing preparation and/or manufacturing for NGG shall be cause for legal recourse by NGG.

Project Name
WEBSTER UNIVERSITY
Location
St. Louis, Missouri

Architect
CANNON DESIGN
Location
St. Louis, MO

Contractor
PARIC
Location
St. Louis, Missouri

Owner
WEBSTER UNIVERSITY
Location
St. Louis, Missouri

Drawn Date	Scale
8/10/16	AS NOTED

NGG Project No.

Drawing Title
DETAILS

Drawn By	Sheet No.
IY	302A

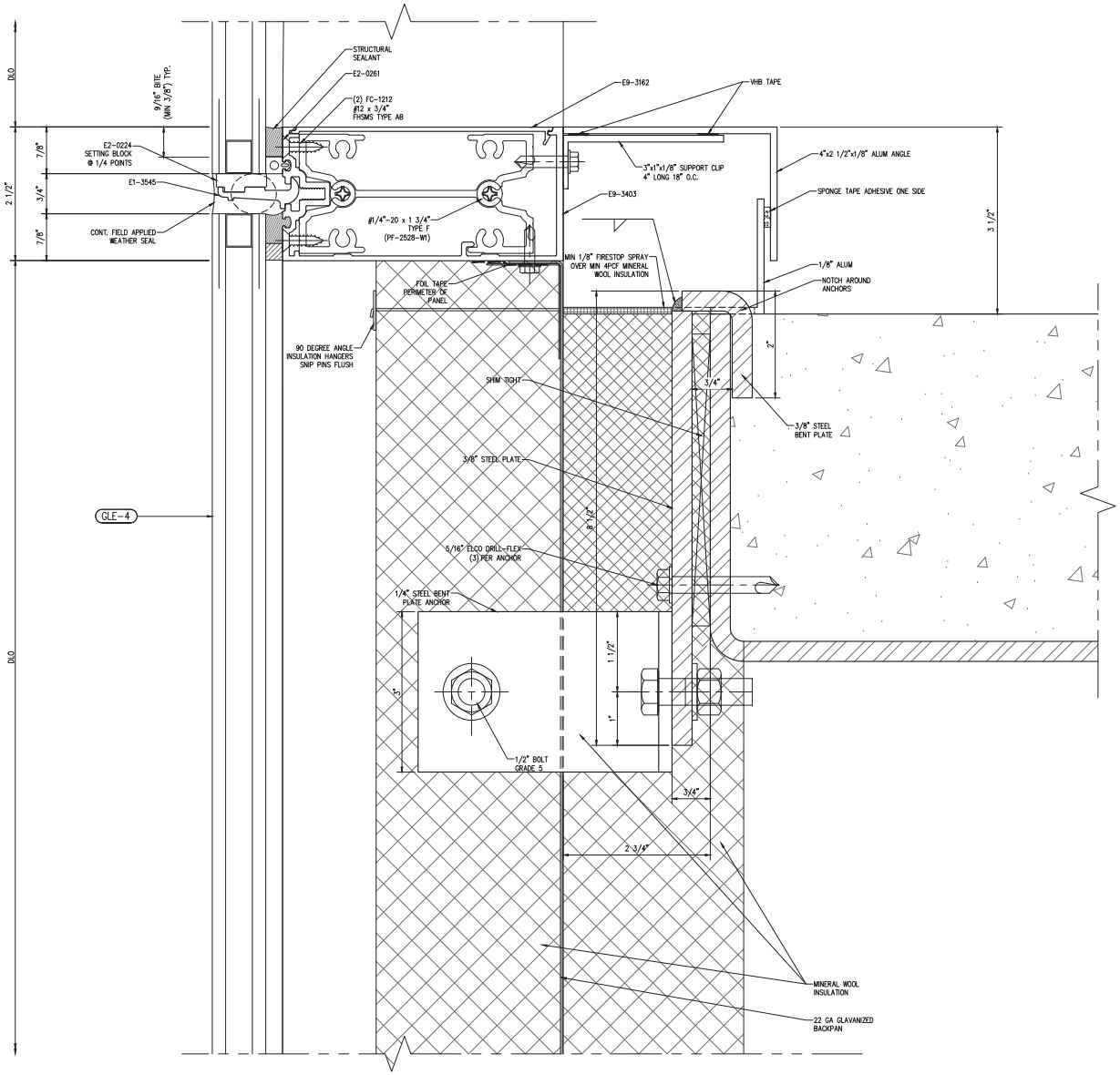

1 ANCHOR DETAIL

REF. 9/A0455 Scale: 1:1

NGG LTD

NGG LTD, INCORPORATED
1550 Craigshire Road Suite 202
St. Louis, Missouri 63146

Tel 314-336-2515
Fax 314-336-2521

Professional Seal 02/28/2017

STATE OF MISSOURI STEWART P. FOSE PE-24002 PROFESSIONAL ENGINEER

The seal on these plans are not valid with out electronic seal on cover.

Sub. No.	Rev. No.	Date	Drawn By	Submittal/Revision Description
4	3	11/28/16	IY	4TH SUBMISSION
3	2	11/8/16	IY	3RD SUBMISSION
2	1	10/19/16	IY	2ND SUBMISSION
1	-	8/10/16	IY	1ST SUBMISSION

Proprietary Notice

This drawing sheet and contents herein are property of NGG. Use of this drawing, contents or design concepts for purposes other than estimating, drawing preparation and/or manufacturing for NGG shall be cause for legal recourse by NGG.

Project Name
WEBSTER UNIVERSITY
Location
St. Louis, Missouri

Architect
CANNON DESIGN
Location
St. Louis, MO

Contractor
PARIC
Location
St. Louis, Missouri

Owner
WEBSTER UNIVERSITY
Location
St. Louis, Missouri

Drawn Date	Scale
8/10/16	AS NOTED

NGG Project No.

Drawing Title
DETAILS

Drawn By	Sheet No.
IY	303

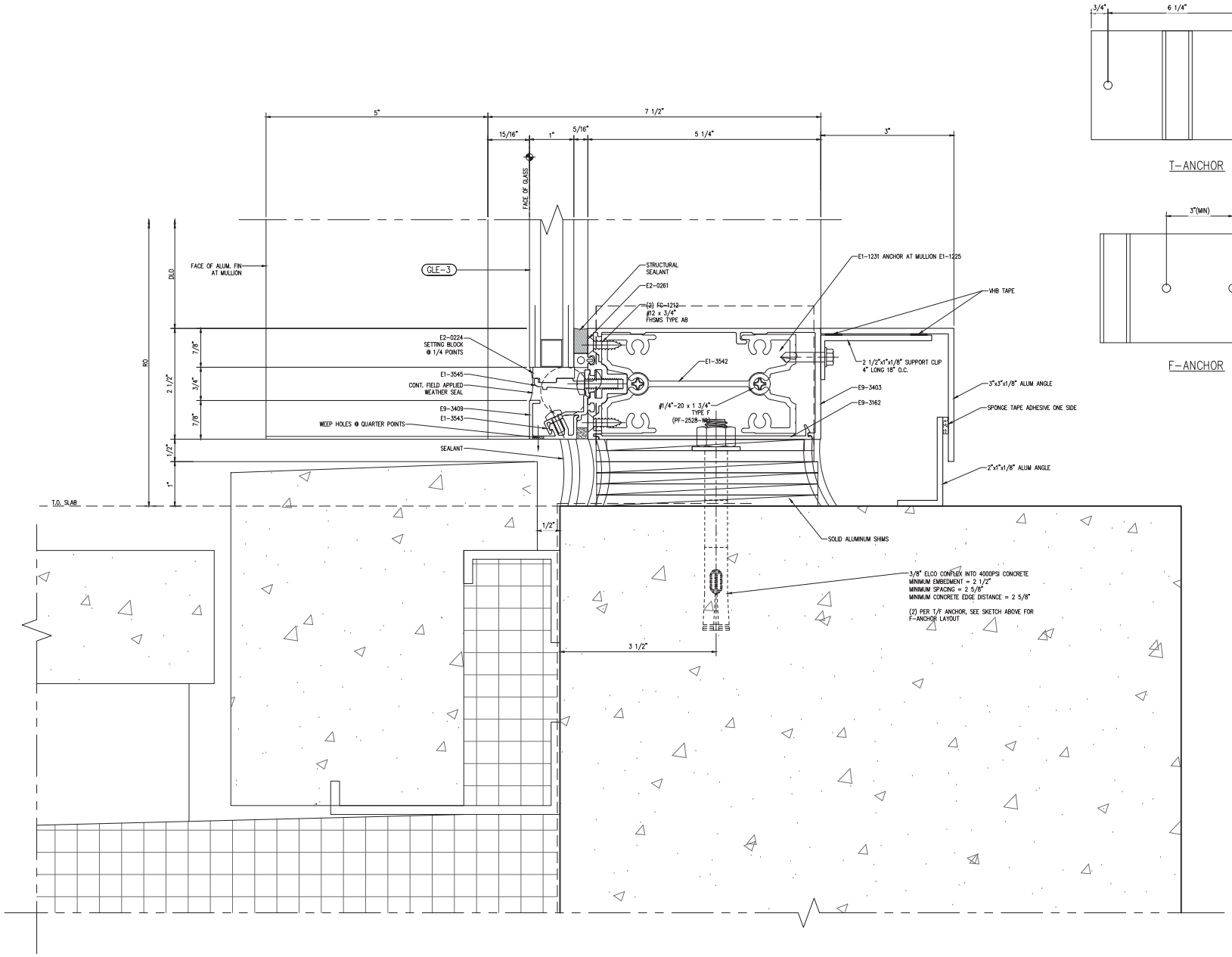

1 SILL DETAIL

REF. 9/A0455 Scale: 1:1

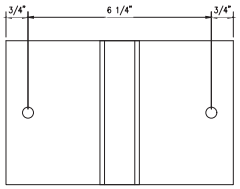

T-ANCHOR

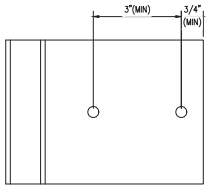

F-ANCHOR

NGG LTD

NGG LTD, INCORPORATED
1850 Craigshire Road Suite 202
St. Louis, Missouri 63146

Tel 314-336-2515
Fax 314-336-2521

Professional Seal 02/28/2017

STATE OF MISSOURI STEWART P. FOSE PE-24002 PROFESSIONAL ENGINEER

The seal on these plans are not valid with out electronic seal on cover.

Sub. No.	Rev. No.	Date	Drawn By	Submittal/Revision Description
4	3	11/28/16	IY	4TH SUBMISSION
3	2	11/8/16	IY	3RD SUBMISSION
2	1	10/19/16	IY	2ND SUBMISSION
1	-	8/10/16	IY	1ST SUBMISSION

Proprietary Notice

This drawing sheet and contents herein are property of NGG. Use of this drawing, contents or design concepts for purposes other than estimating, drawing preparation and/or manufacturing for NGG shall be cause for legal recourse by NGG.

Project Name
WEBSTER UNIVERSITY
Location
St. Louis, Missouri

Architect
CANNON DESIGN
Location
St. Louis, MO

Contractor
PARIC
Location
St. Louis, Missouri

Owner
WEBSTER UNIVERSITY
Location
St. Louis, Missouri

Drawn Date	Scale
8/10/16	AS NOTED

NGG Project No.

Drawing Title
DETAILS

Drawn By	Sheet No.
IY	304

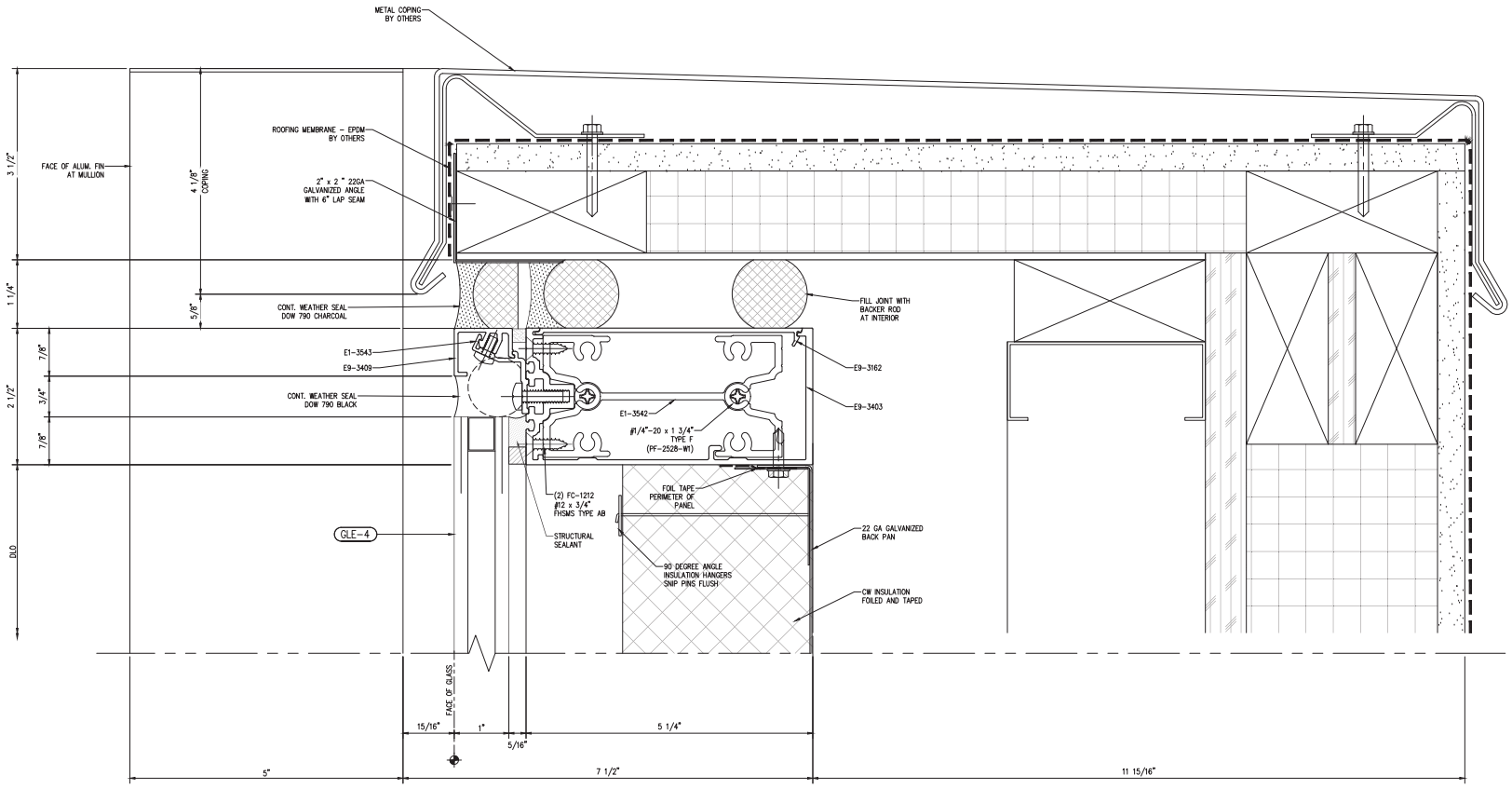

1 HEAD DETAIL

REF. 7/A0451

Scale: 1:1

NGG LTD

NGG LTD, INCORPORATED
1550 Craigshire Road Suite 202
St. Louis, Missouri 63146

Tel 314-336-2515
Fax 314-336-2521

Professional Seal 02/28/2017

STATE OF MISSOURI
STEWART P. ESKE
NUMBER PE-24002
PROFESSIONAL ENGINEER

The seal on these plans are not valid with out electronic seal on cover.

Sub. No.	Rev. No.	Date	Drawn By	Submittal/Revision Description
4	3	11/28/16	IY	4TH SUBMISSION
3	2	11/8/16	IY	3RD SUBMISSION
2	1	10/19/16	IY	2ND SUBMISSION
1	-	8/10/16	IY	1ST SUBMISSION

Proprietary Notice

This drawing sheet and contents herein are property of NGG. Use of this drawing, contents or design concepts for purposes other than estimating, drawing preparation and/or manufacturing for NGG shall be cause for legal recourse by NGG.

Project Name
WEBSTER UNIVERSITY
Location
St. Louis, Missouri

Architect
CANNON DESIGN
Location
St. Louis, MO

Contractor
PARIC
Location
St. Louis, Missouri

Owner
WEBSTER UNIVERSITY
Location
St. Louis, Missouri

Drawn Date	Scale
8/10/16	AS NOTED

NGG Project No.

Drawing Title
DETAILS

Drawn By	Sheet No.
IY	305

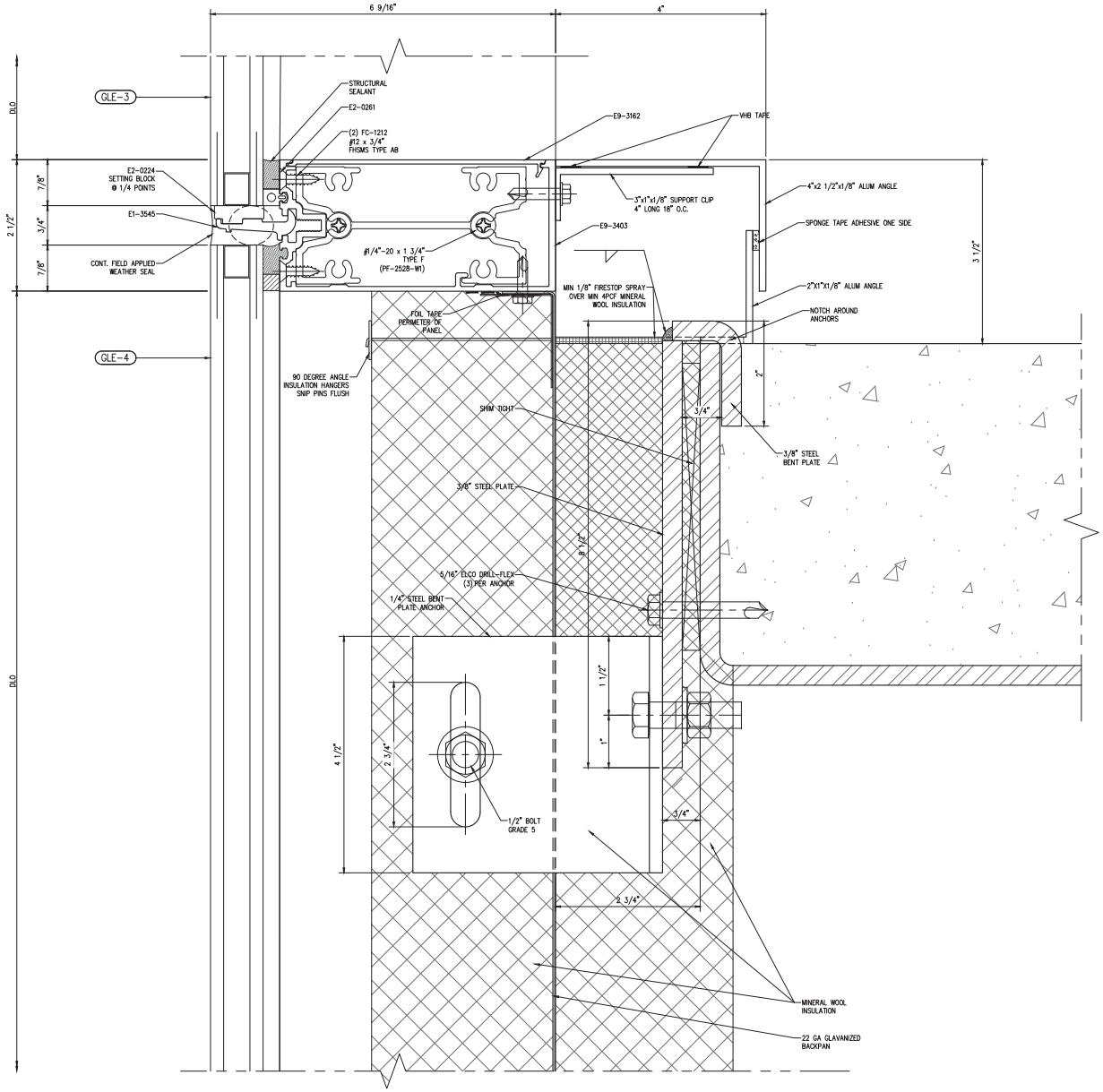

1 WIND LOAD ANCHOR

REF. 9/A0455 Scale: 1:1

NGG LTD

NGG LTD, INCORPORATED
1550 Craigshire Road Suite 202
St. Louis, Missouri 63146

Tel 314-336-2515
Fax 314-336-2521

Professional Seal 02/28/2017

STATE OF MISSOURI STEWART P. FOKE NUMBER PE-24002 PROFESSIONAL ENGINEER

The seal on these plans are not valid with out electronic seal on cover.

Sub. No.	Rev. No.	Date	Drawn By	Submittal/Revision Description
4	3	11/28/16	IY	4TH SUBMISSION
3	2	11/8/16	IY	3RD SUBMISSION
2	1	10/19/16	IY	2ND SUBMISSION
1	-	8/10/16	IY	1ST SUBMISSION

Proprietary Notice

This drawing sheet and contents herein are property of NGG. Use of this drawing, contents or design concepts for purposes other than estimating, drawing preparation and/or manufacturing for NGG shall be cause for legal recourse by NGG.

Project Name
WEBSTER UNIVERSITY
Location
St. Louis, Missouri

Architect
CANNON DESIGN
Location
St. Louis, MO

Contractor
PARIC
Location
St. Louis, Missouri

Owner
WEBSTER UNIVERSITY
Location
St. Louis, Missouri

Drawn Date	Scale
8/10/16	AS NOTED

NGG Project No.

Drawing Title
DETAILS

Drawn By	Sheet No.
IY	306

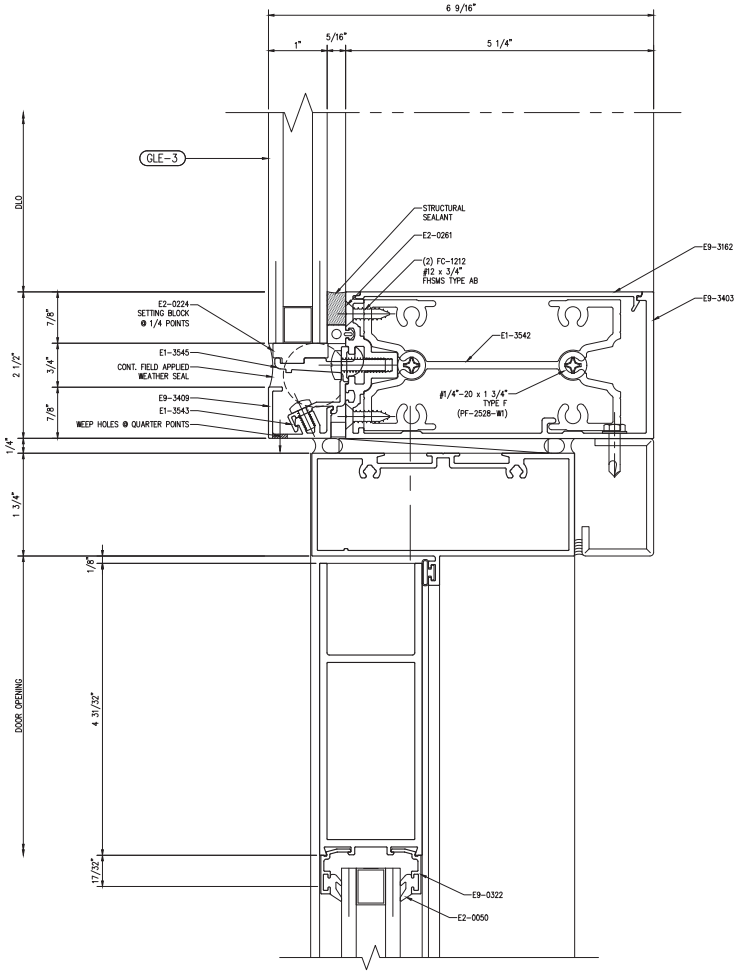

1 DOOR HEAD DETAIL
Scale: 1:1

NGG LTD

NGG LTD, INCORPORATED
1550 Craigshire Road Suite 202
St. Louis, Missouri 63146

Tel 314-336-2515
Fax 314-336-2521

Professional Seal 02/28/2017

STATE OF MISSOURI
STEWART P. FISKE
NUMBER PE-24002
PROFESSIONAL ENGINEER

The seal on these plans are not valid with out electronic seal on cover.

Sub. No.	Rev. No.	Date	Drawn By	Submittal/Revision Description
4	3	11/28/16	IY	4TH SUBMISSION
3	2	11/8/16	IY	3RD SUBMISSION
2	1	10/19/16	IY	2ND SUBMISSION
1	-	8/10/16	IY	1ST SUBMISSION

Proprietary Notice

This drawing sheet and contents herein are property of NGG. Use of this drawing, contents or design concepts for purposes other than estimating, drawing preparation and/or manufacturing for NGG shall be cause for legal recourse by NGG.

Project Name
WEBSTER UNIVERSITY
Location
St. Louis, Missouri

Architect
CANNON DESIGN
Location
St. Louis, MO

Contractor
PARIC
Location
St. Louis, Missouri

Owner
WEBSTER UNIVERSITY
Location
St. Louis, Missouri

Drawn Date	Scale
8/10/16	AS NOTED

NGG Project No.

Drawing Title
DETAILS

Drawn By	Sheet No.
IY	308

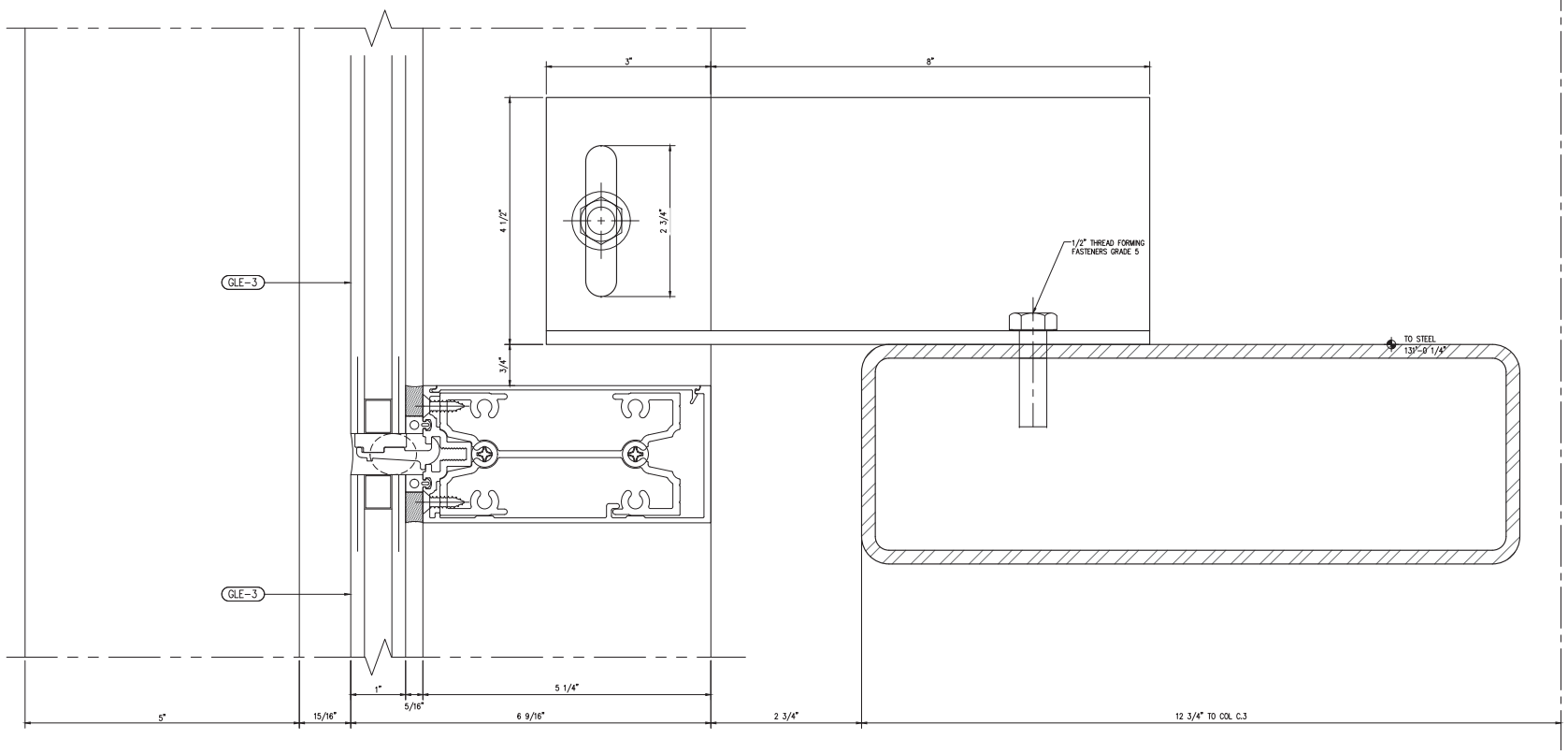

1 WIND LOAD ANCHOR
REF. 22/S303
Scale: 1:1

NGG LTD

NGG LTD, INCORPORATED
1550 Craigshire Road Suite 202
St. Louis, Missouri 63146

Tel 314-336-2515
Fax 314-336-2521

Professional Seal 02/28/2017

The seal on these plans are not valid with out electronic seal on cover.

Sub. No.	Rev. No.	Date	Drawn By	Submittal/Revision Description
4	3	11/29/16	IY	4TH SUBMISSION
3	2	11/8/16	IY	3RD SUBMISSION
2	1	10/19/16	IY	2ND SUBMISSION
1	–	8/10/16	IY	1ST SUBMISSION

Proprietary Notice

This drawing sheet and contents herein are property of NGG. Use of this drawing, contents or design concepts for purposes other than estimating, drawing preparation and/or manufacturing for NGG shall be cause for legal recourse by NGG.

Project Name
WEBSTER UNIVERSITY
Location
St. Louis, Missouri

Architect
CANNON DESIGN
Location
St. Louis, MO

Contractor
PARIC
Location
St. Louis, Missouri

Owner
WEBSTER UNIVERSITY
Location
St. Louis, Missouri

Drawn Date	Scale
8/10/16	AS NOTED

NGG Project No.

Drawing Title
DETAILS

Drawn By	Sheet No.
IY	309

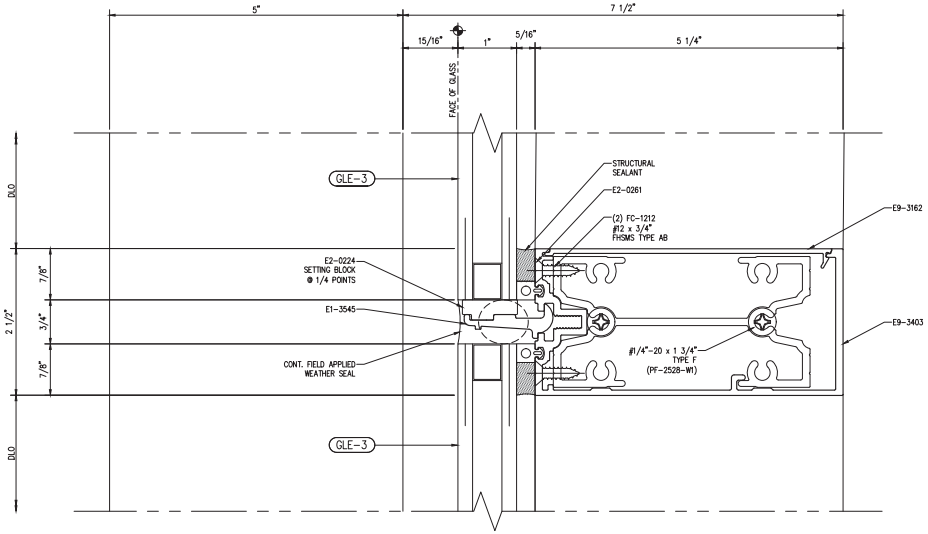

1 INTERMEDIATE HORIZONTAL
Scale: 1:1

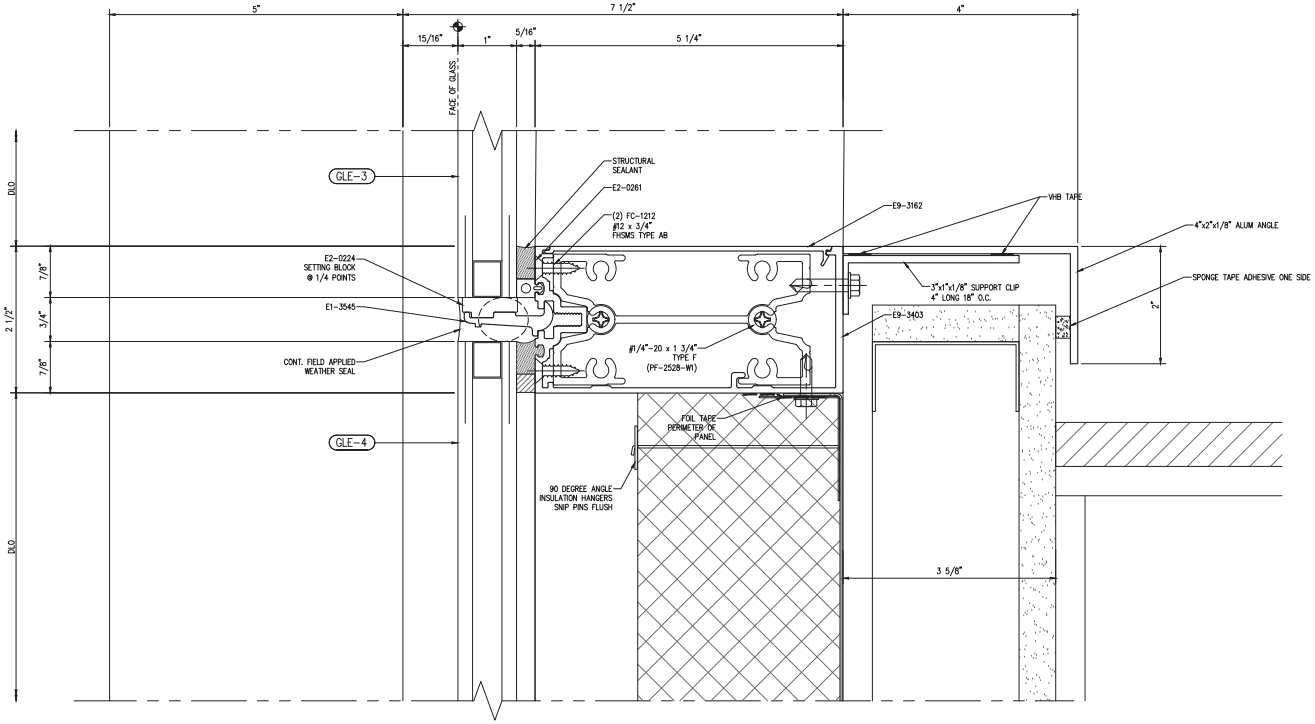

2 INTERMEDIATE HORIZONTAL
Scale: 1:1

NGG LTD

NGG LTD, INCORPORATED
1550 Craigshire Road Suite 202
St. Louis, Missouri 63146

Tel 314-336-2515
Fax 314-336-2521

Professional Seal 02/28/2017

STATE OF MISSOURI
STEWART P. FOKE
NUMBER PE-24002
PROFESSIONAL ENGINEER

The seal on these plans are not valid with out electronic seal on cover.

Sub. No.	Rev. No.	Date	Drawn By	Submittal/Revision Description
4	3	11/28/16	IY	4TH SUBMISSION
3	2	11/8/16	IY	3RD SUBMISSION
2	1	10/19/16	IY	2ND SUBMISSION
1	–	8/10/16	IY	1ST SUBMISSION

Proprietary Notice

This drawing sheet and contents herein are property of NGG. Use of this drawing, contents or design concepts for purposes other than estimating, drawing preparation and/or manufacturing for NGG shall be cause for legal recourse by NGG.

Project Name
WEBSTER UNIVERSITY
Location
St. Louis, Missouri

Architect
CANNON DESIGN
Location
St. Louis, MO

Contractor
PARIC
Location
St. Louis, Missouri

Owner
WEBSTER UNIVERSITY
Location
St. Louis, Missouri

Drawn Date	Scale
8/10/16	AS NOTED

NGG Project No.

Drawing Title
DETAILS

Drawn By	Sheet No.
IY	310

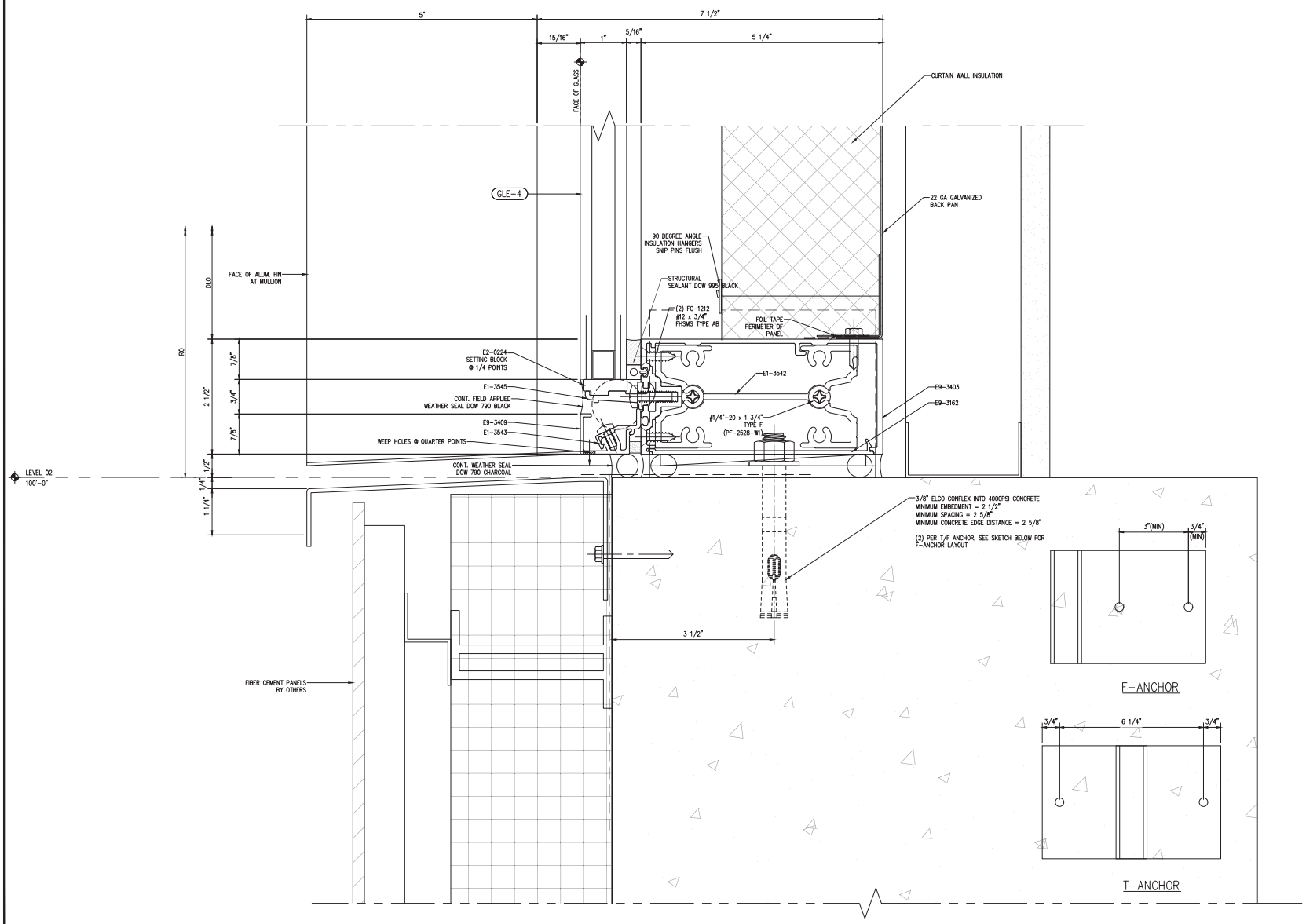

1 SILL DETAIL

REF. 1/A0451 Scale: 1:1

NGG LTD

NGG LTD, INCORPORATED
1550 Craigshire Road Suite 202
St. Louis, Missouri 63146

Tel 314-336-2515
Fax 314-336-2521

Professional Seal 02/28/2017

STATE OF MISSOURI
STEWART P. FOKE
PE-24002
PROFESSIONAL ENGINEER

The seal on these plans are not valid with out electronic seal on cover.

Sub. No.	Rev. No.	Date	Drawn By	Submittal/Revision Description
4	3	11/28/16	IY	4TH SUBMISSION
3	2	11/8/16	IY	3RD SUBMISSION
2	1	10/19/16	IY	2ND SUBMISSION
1	-	8/10/16	IY	1ST SUBMISSION

Proprietary Notice

This drawing sheet and contents herein are property of NGG. Use of this drawing, contents or design concepts for purposes other than estimating, drawing preparation and/or manufacturing for NGG shall be cause for legal recourse by NGG.

Project Name
WEBSTER UNIVERSITY
Location
St. Louis, Missouri

Architect
CANNON DESIGN
Location
St. Louis, MO

Contractor
PARIC
Location
St. Louis, Missouri

Owner
WEBSTER UNIVERSITY
Location
St. Louis, Missouri

Drawn Date	Scale
8/10/16	AS NOTED

NGG Project No.

Drawing Title
DETAILS

Drawn By	Sheet No.
IY	311

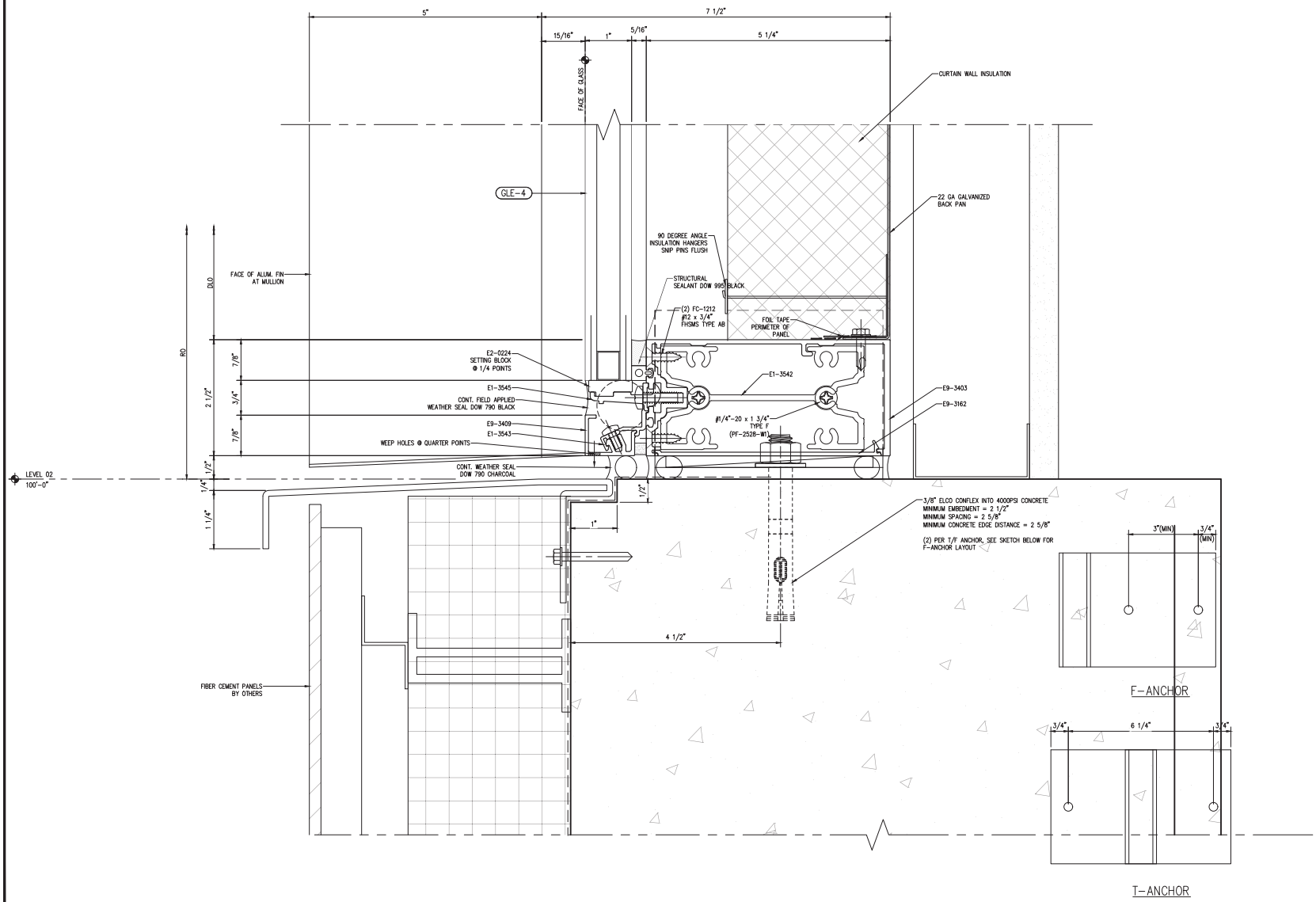

1 SILL DETAIL

REF. 1/A0451

Scale: 1:1

NGG LTD

NGG LTD, INCORPORATED
1550 Craigshire Road Suite 202
St. Louis, Missouri 63146

Tel 314-336-2515
Fax 314-336-2521

Professional Seal 02/28/2017

STATE OF MISSOURI STEWART P. FOSE PE-24002 PROFESSIONAL ENGINEER

The seal on these plans are not valid with out electronic seal on cover.

Sub. No.	Rev. No.	Date	Drawn By	Submittal/Revision Description
4	3	11/28/16	IY	4TH SUBMISSION
3	2	11/8/16	IY	3RD SUBMISSION
2	1	10/19/16	IY	2ND SUBMISSION
1	-	8/10/16	IY	1ST SUBMISSION

Proprietary Notice

This drawing sheet and contents herein are property of NGG. Use of this drawing, contents or design concepts for purposes other than estimating, drawing preparation and/or manufacturing for NGG shall be cause for legal recourse by NGG.

Project Name
WEBSTER UNIVERSITY
Location
St. Louis, Missouri

Architect
CANNON DESIGN
Location
St. Louis, MO

Contractor
PARIC
Location
St. Louis, Missouri

Owner
WEBSTER UNIVERSITY
Location
St. Louis, Missouri

Drawn Date	Scale
8/10/16	AS NOTED

NGG Project No.

Drawing Title
DETAILS

Drawn By	Sheet No.
IY	311A

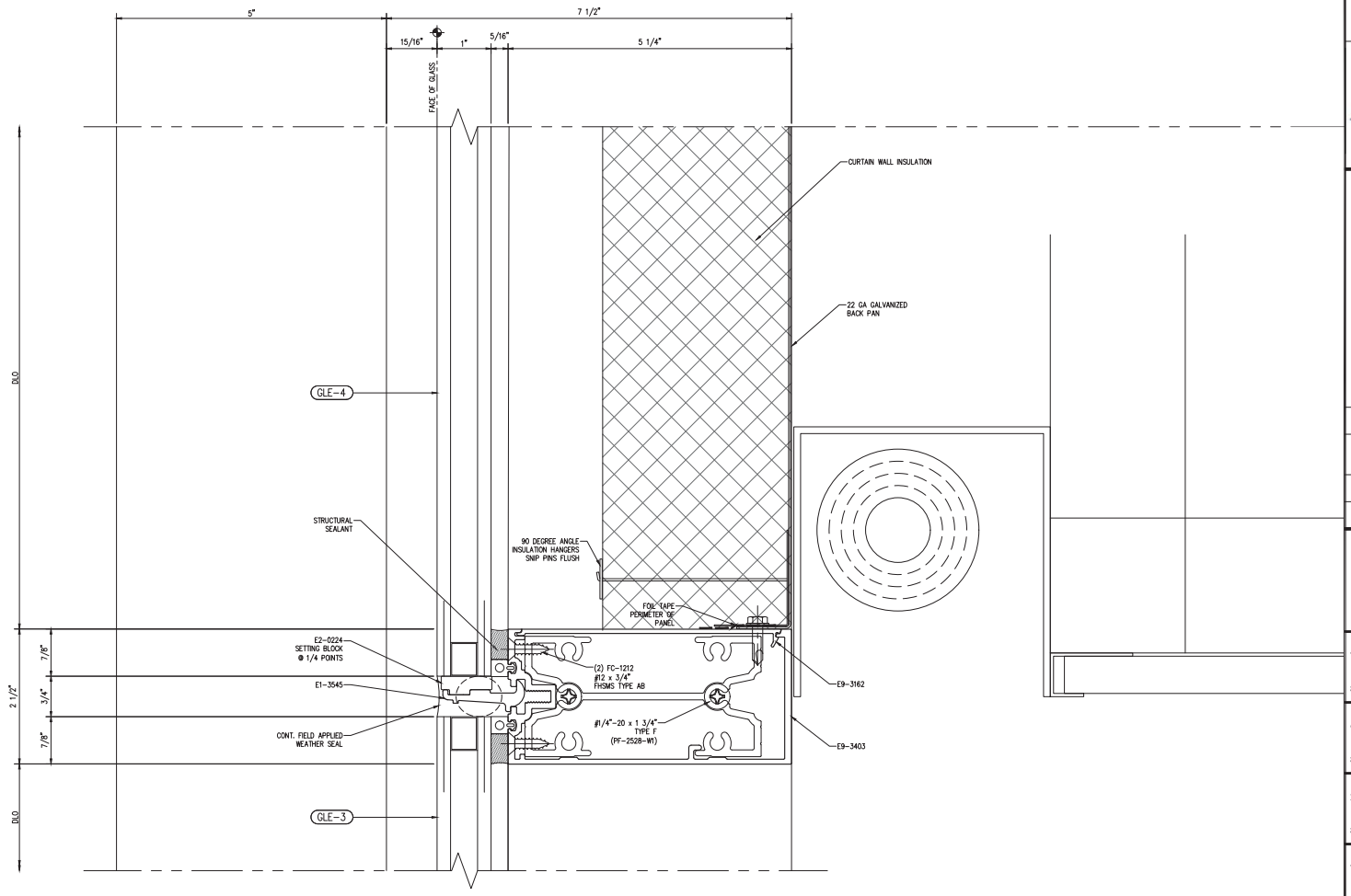

1 INTERMEDIATE HORIZONTAL
Scale: 1:1

NGG LTD

NGG LTD, INCORPORATED
1550 Craigshire Road Suite 202
St. Louis, Missouri 63146

Tel 314-336-2515
Fax 314-336-2521

Professional Seal 02/28/2017

STATE OF MISSOURI
STEWART P. FOKE
NUMBER PE-24002
PROFESSIONAL ENGINEER

The seal on these plans are not valid with out electronic seal on cover.

Sub. No.	Rev. No.	Date	Drawn By	Submittal/Revision Description
4	3	11/28/16	IY	4TH SUBMISSION
3	2	11/8/16	IY	3RD SUBMISSION
2	1	10/19/16	IY	2ND SUBMISSION
1	–	8/10/16	IY	1ST SUBMISSION

Proprietary Notice

This drawing sheet and contents herein are property of NGG. Use of this drawing, contents or design concepts for purposes other than estimating, drawing preparation and/or manufacturing for NGG shall be cause for legal recourse by NGG.

Project Name
WEBSTER UNIVERSITY
Location
St. Louis, Missouri

Architect
CANNON DESIGN
Location
St. Louis, MO

Contractor
PARIC
Location
St. Louis, Missouri

Owner
WEBSTER UNIVERSITY
Location
St. Louis, Missouri

Drawn Date	Scale
8/10/16	AS NOTED

NGG Project No.

Drawing Title
DETAILS

Drawn By	Sheet No.
IY	312

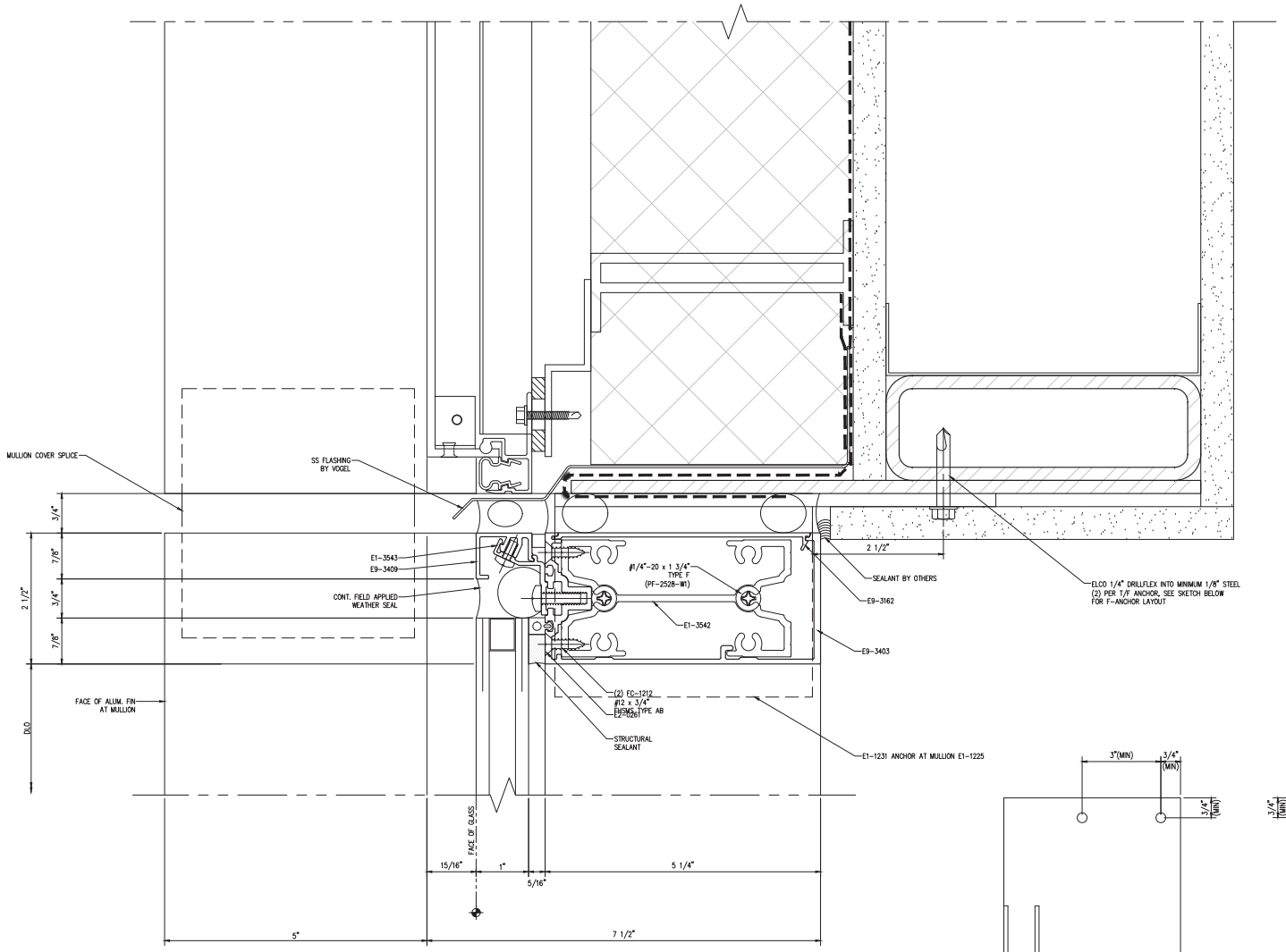

1 HEAD DETAIL

Scale: 1:1

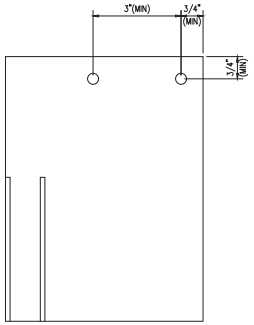

F-ANCHOR

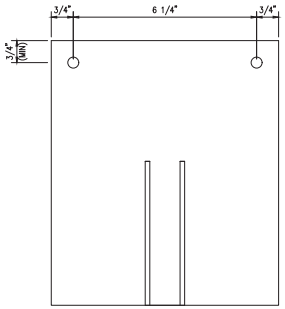

T-ANCHOR

NGG LTD

NGG LTD, INCORPORATED
1550 Craigshire Road Suite 202
St. Louis, Missouri 63146

Tel 314-336-2515
Fax 314-336-2521

Professional Seal 02/28/2017

STATE OF MISSOURI STEWART P. FOKE PE-24002 PROFESSIONAL ENGINEER

The seal on these plans are not valid with out electronic seal on cover.

Sub. No.	Rev. No.	Date	Drawn By	Submittal/Revision Description
4	3	11/29/16	IY	4TH SUBMISSION
3	2	11/8/16	IY	3RD SUBMISSION
2	1	10/19/16	IY	2ND SUBMISSION
1	–	8/10/16	IY	1ST SUBMISSION

Proprietary Notice

This drawing sheet and contents herein are property of NGG. Use of this drawing, contents or design concepts for purposes other than estimating, drawing preparation and/or manufacturing for NGG shall be cause for legal recourse by NGG.

Project Name
WEBSTER UNIVERSITY
Location
St. Louis, Missouri

Architect
CANNON DESIGN
Location
St. Louis, MO

Contractor
PARIC
Location
St. Louis, Missouri

Owner
WEBSTER UNIVERSITY
Location
St. Louis, Missouri

Drawn Date	Scale
8/10/16	AS NOTED

NGG Project No.

Drawing Title
DETAILS

Drawn By	Sheet No.
IY	313

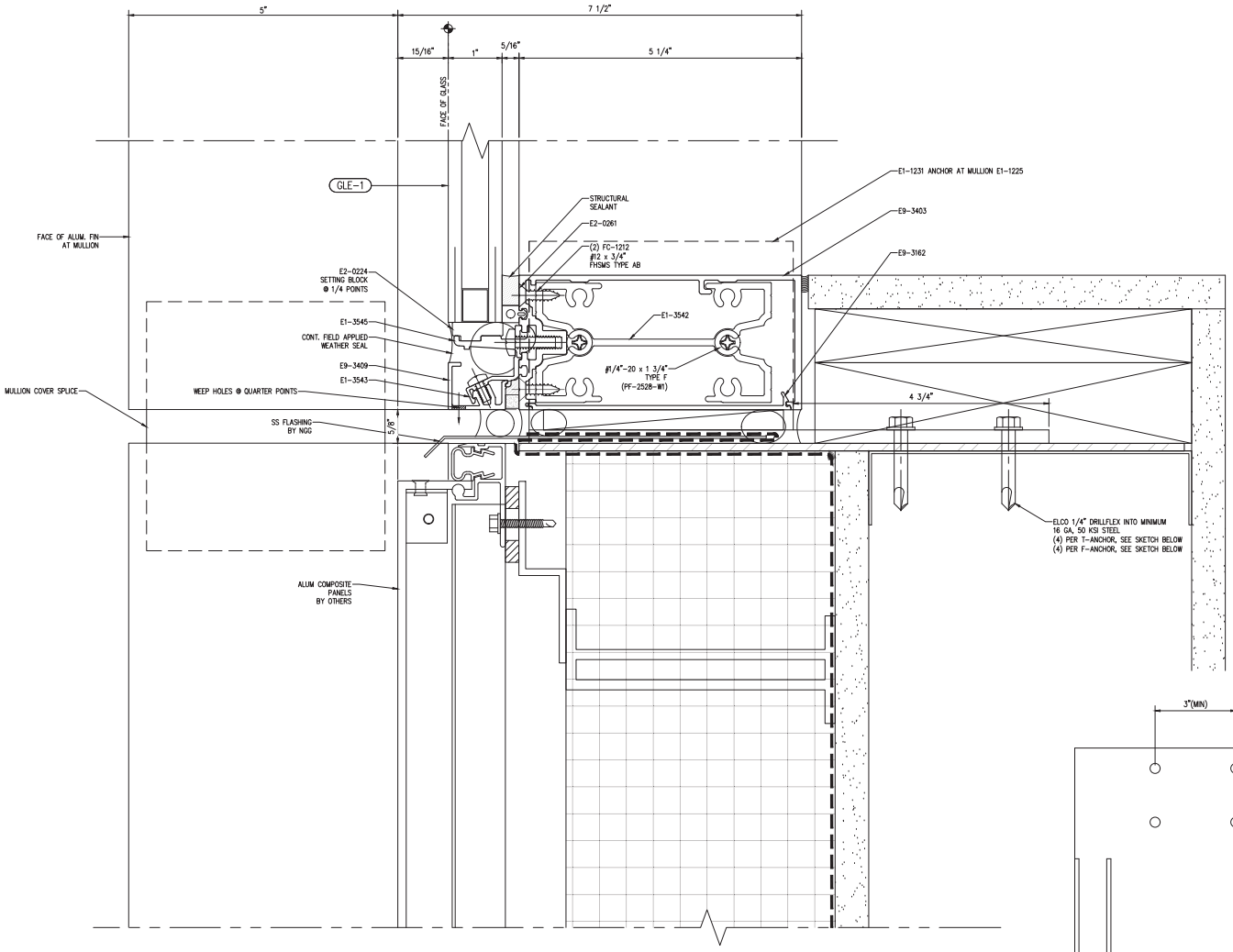

1 SILL DETAIL

Scale: 1:1

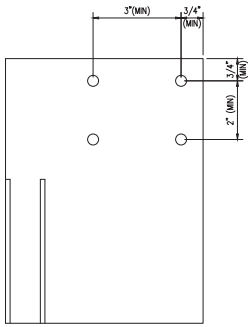

F-ANCHOR

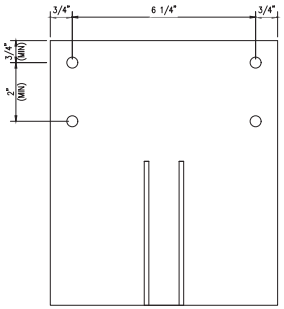

T-ANCHOR

NGG LTD

NGG LTD, INCORPORATED
1850 Craigshire Road Suite 202
St. Louis, Missouri 63146

Tel 314-336-2515
Fax 314-336-2521

Professional Seal 02/28/2017

STATE OF MISSOURI STEWART P. FOSE PE-24002 PROFESSIONAL ENGINEER

The seal on these plans are not valid with out electronic seal on cover.

Sub. No.	Rev. No.	Date	Drawn By	Submittal/Revision Description
4	3	11/28/16	IY	4TH SUBMISSION
3	2	11/8/16	IY	3RD SUBMISSION
2	1	10/19/16	IY	2ND SUBMISSION
1	-	8/10/16	IY	1ST SUBMISSION

Proprietary Notice

This drawing sheet and contents herein are property of NGG. Use of this drawing, contents or design concepts for purposes other than estimating, drawing preparation and/or manufacturing for NGG shall be cause for legal recourse by NGG.

Project Name
WEBSTER UNIVERSITY
Location
St. Louis, Missouri

Architect
CANNON DESIGN
Location
St. Louis, MO

Contractor
PARIC
Location
St. Louis, Missouri

Owner
WEBSTER UNIVERSITY
Location
St. Louis, Missouri

Drawn Date	Scale
8/10/16	AS NOTED

NGG Project No.

Drawing Title
DETAILS

Drawn By	Sheet No.
IY	314

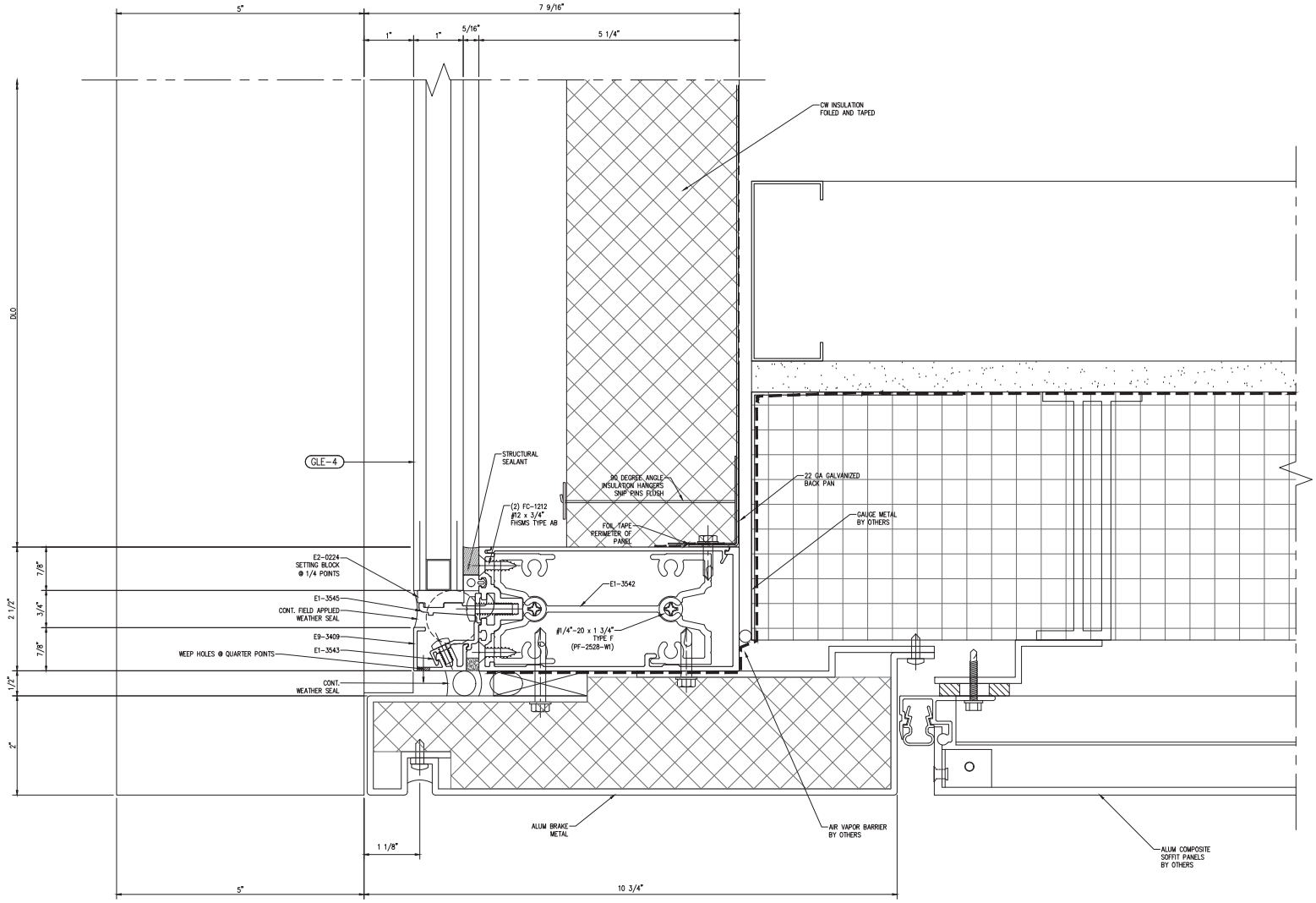

1 SILL DETAIL

Scale: 1:1

NGG LTD

NGG LTD, INCORPORATED
1850 Craigshire Road Suite 202
St. Louis, Missouri 63146

Tel 314-336-2515
Fax 314-336-2521

Professional Seal 02/28/2017

STATE OF MISSOURI STEWART P. ROSE PE-24002 PROFESSIONAL ENGINEER

The seal on these plans are not valid with out electronic seal on cover.

Sub. No.	Rev. No.	Date	Drawn By	Submittal/Revision Description
4	3	11/28/16	IY	4TH SUBMISSION
3	2	11/8/16	IY	3RD SUBMISSION
2	1	10/19/16	IY	2ND SUBMISSION
1	-	8/10/16	IY	1ST SUBMISSION

Proprietary Notice

This drawing sheet and contents herein are property of NGG. Use of this drawing, contents or design concepts for purposes other than estimating, drawing preparation and/or manufacturing for NGG shall be cause for legal recourse by NGG.

Project Name
WEBSTER UNIVERSITY
Location
St. Louis, Missouri

Architect
CANNON DESIGN
Location
St. Louis, MO

Contractor
PARIC
Location
St. Louis, Missouri

Owner
WEBSTER UNIVERSITY
Location
St. Louis, Missouri

Drawn Date	Scale
8/10/16	AS NOTED

NGG Project No.

Drawing Title
DETAILS

Drawn By	Sheet No.
IY	315

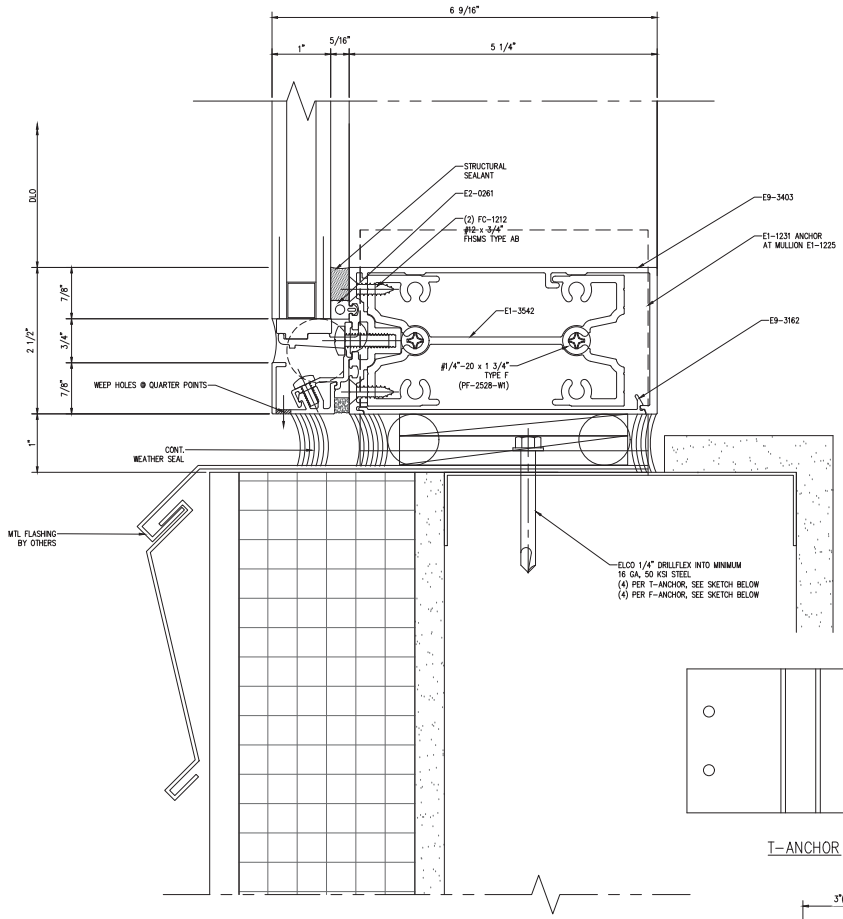

1 SILL DETAIL

Scale: 1:1

REF. 4/A0453

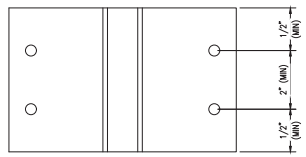

T-ANCHOR

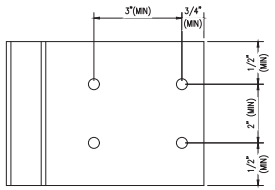

F-ANCHOR

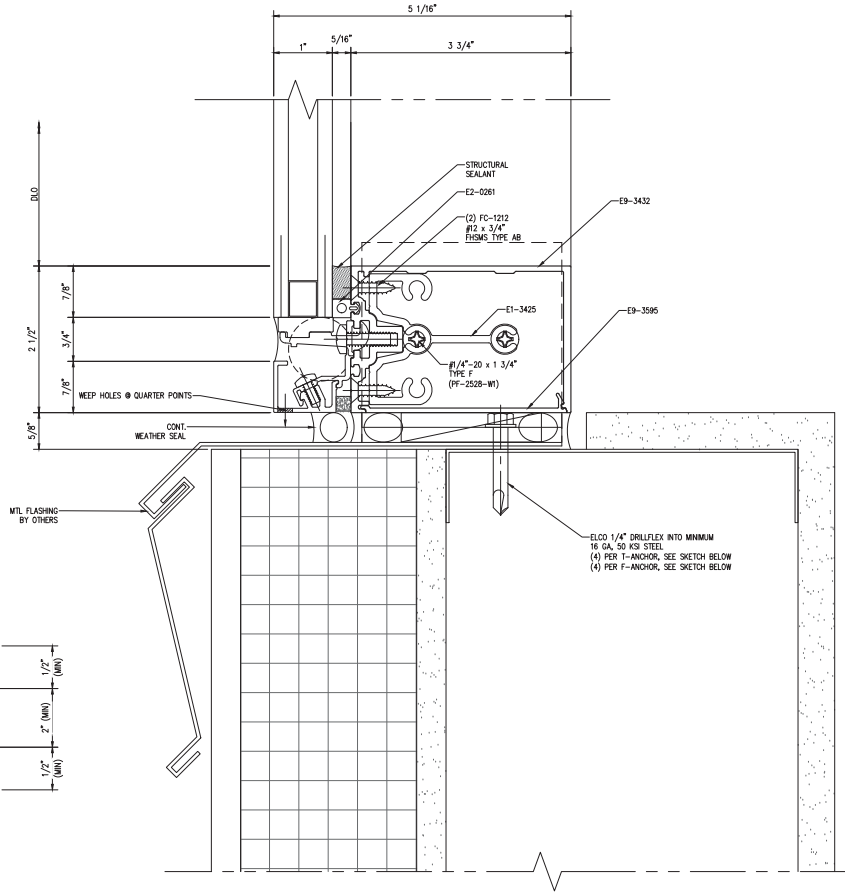

2 SILL DETAIL

Scale: 1:1

NGG LTD

NGG LTD, INCORPORATED
1850 Craigshire Road Suite 202
St. Louis, Missouri 63146

Tel 314-336-2515
Fax 314-336-2521

Professional Seal 02/28/2017

STATE OF MISSOURI
STEWART P. FOKE
PE-24002
PROFESSIONAL ENGINEER

The seal on these plans are not valid with out electronic seal on cover.

Sub. No.	Rev. No.	Date	Drawn. By	Submittal/Revision Description
4	3	11/28/16	IY	4TH SUBMISSION
3	2	11/8/16	IY	3RD SUBMISSION
2	1	10/19/16	IY	2ND SUBMISSION
1	-	8/10/16	IY	1ST SUBMISSION

Proprietary Notice

This drawing sheet and contents herein are property of NGG. Use of this drawing, contents or design concepts for purposes other than estimating, drawing preparation and/or manufacturing for NGG shall be cause for legal recourse by NGG.

Project Name
WEBSTER UNIVERSITY
Location
St. Louis, Missouri

Architect
CANNON DESIGN
Location
St. Louis, MO

Contractor
PARIC
Location
St. Louis, Missouri

Owner
WEBSTER UNIVERSITY
Location
St. Louis, Missouri

Drawn Date	Scale
8/10/16	AS NOTED

NGG Project No.

Drawing Title
DETAILS

Drawn By	Sheet No.
IY	316

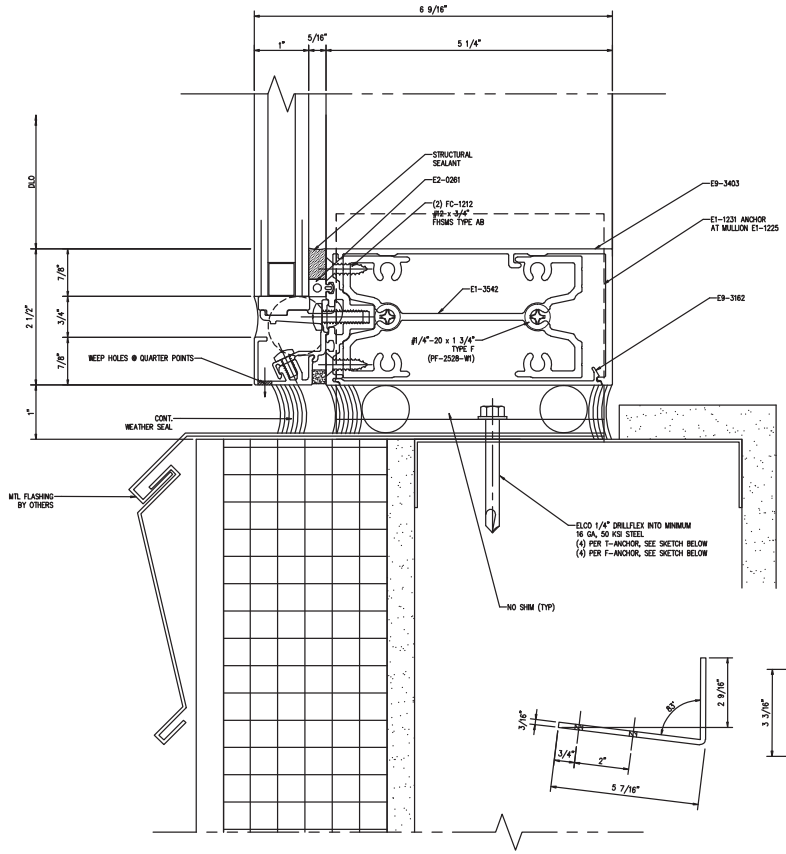

1 SILL DETAIL

Scale: 1:1

REF. 4/A0453

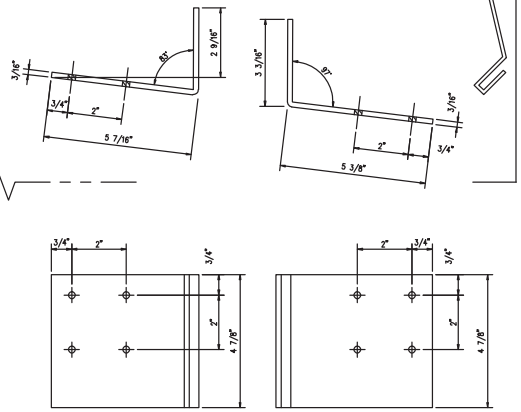

F-ANCHOR

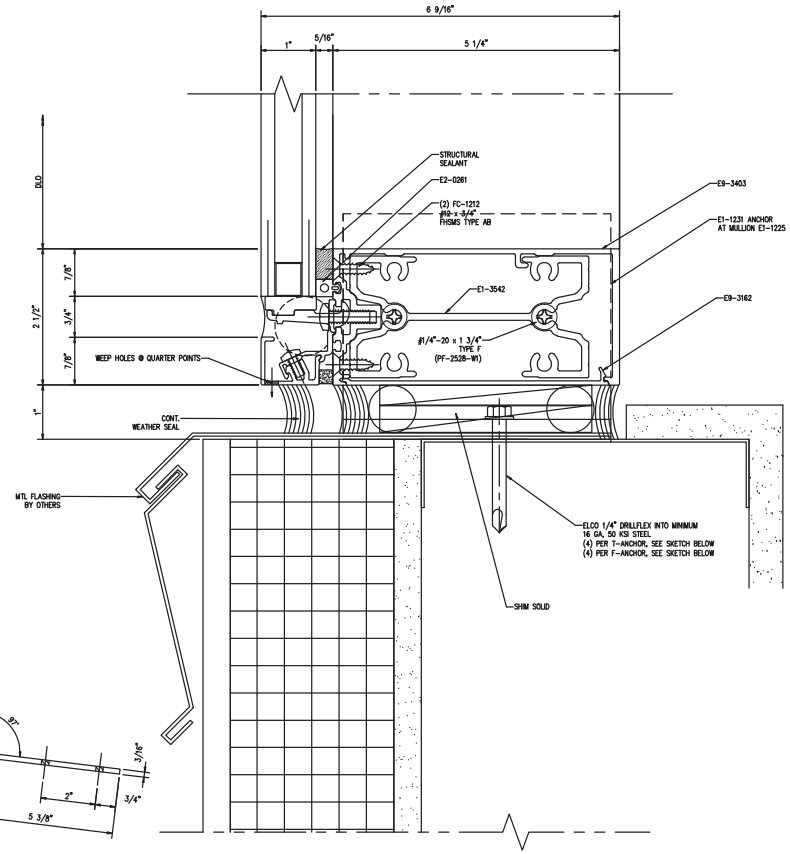

2 SILL DETAIL

Scale: 1:1

REF. 4/A0453

NGG LTD

NGG LTD, INCORPORATED
1850 Craigshire Road Suite 202
St. Louis, Missouri 63146

Tel 314-336-2515
Fax 314-336-2521

Professional Seal 02/28/2017

STATE OF MISSOURI
STEWART P. JESSE
NUMBER PE-24002
PROFESSIONAL ENGINEER

The seal on these plans are not valid with out electronic signature.

Sub. No.	Rev. No.	Date	Drawn By	Submittal/Revision Description
1	4	02/23/17	RS	GTS SUBMISSION

Proprietary Notice

This drawing sheet and contents herein are property of NGG. Use of this drawing, contents or design concepts for purposes other than estimating, drawing preparation and/or manufacturing for NGG shall be cause for legal recourse by NGG.

Project Name
WEBSTER UNIVERSITY
Location
St. Louis, Missouri

Architect
CANNON DESIGN
Location
St. Louis, MO

Contractor
PARIC
Location
St. Louis, Missouri

Owner
WEBSTER UNIVERSITY
Location
St. Louis, Missouri

Drawn Date	Scale
02/23/17	AS NOTED

NGG Project No.
10047

Drawing Title
DETAILS

Drawn By	Sheet No.
IY	316A

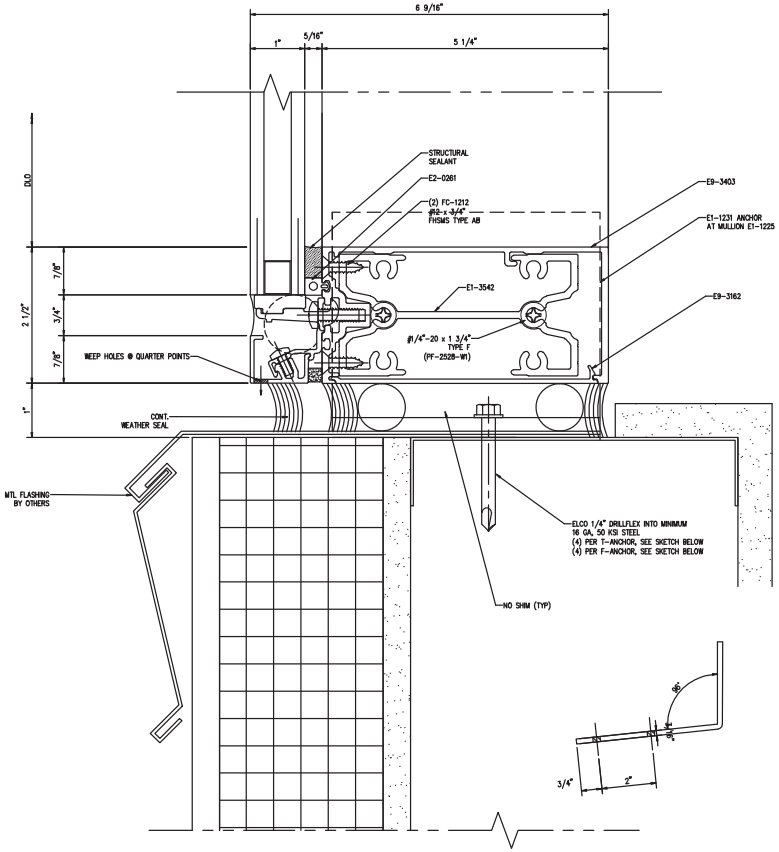

1 SILL DETAIL

Scale: 1:1

REF. 4/A0453

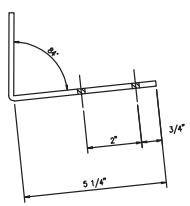

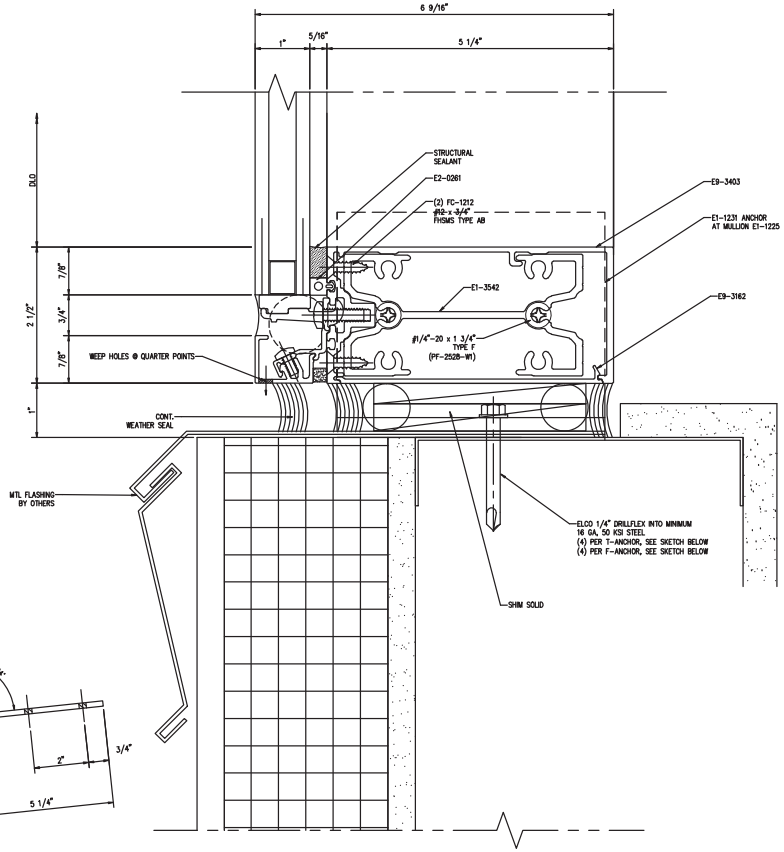

2 SILL DETAIL

Scale: 1:1

REF. 4/A0453

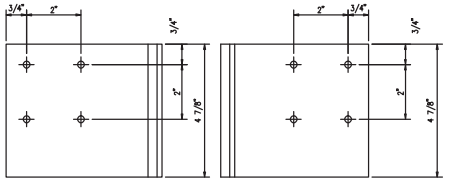

F-ANCHOR

NGG LTD

NGG LTD, INCORPORATED
1850 Craigshire Road Suite 202
St. Louis, Missouri 63146

Tel 314-336-2515
Fax 314-336-2521

Professional Seal 02/28/2017

STATE OF MISSOURI
STEWART P. ROSE
NUMBER PE-24002
PROFESSIONAL ENGINEER

The seal on these plans are not valid with out electronic seal on cover

Sub. No.	Rev. No.	Date	Drawn By	Submittal/Revision Description
1	4	02/23/17	RS	GTS SUBMISSION

Proprietary Notice

This drawing sheet and contents herein are property of NGG. Use of this drawing, contents or design concepts for purposes other than estimating, drawing preparation and/or manufacturing for NGG shall be cause for legal recourse by NGG.

Project Name
WEBSTER UNIVERSITY
Location
St. Louis, Missouri

Architect
CANNON DESIGN
Location
St. Louis, MO

Contractor
PARIC
Location
St. Louis, Missouri

Owner
WEBSTER UNIVERSITY
Location
St. Louis, Missouri

Drawn Date	Scale
02/23/17	AS NOTED

NGG Project No.
10047

Drawing Title
DETAILS

Drawn By	Sheet No.
IY	316B

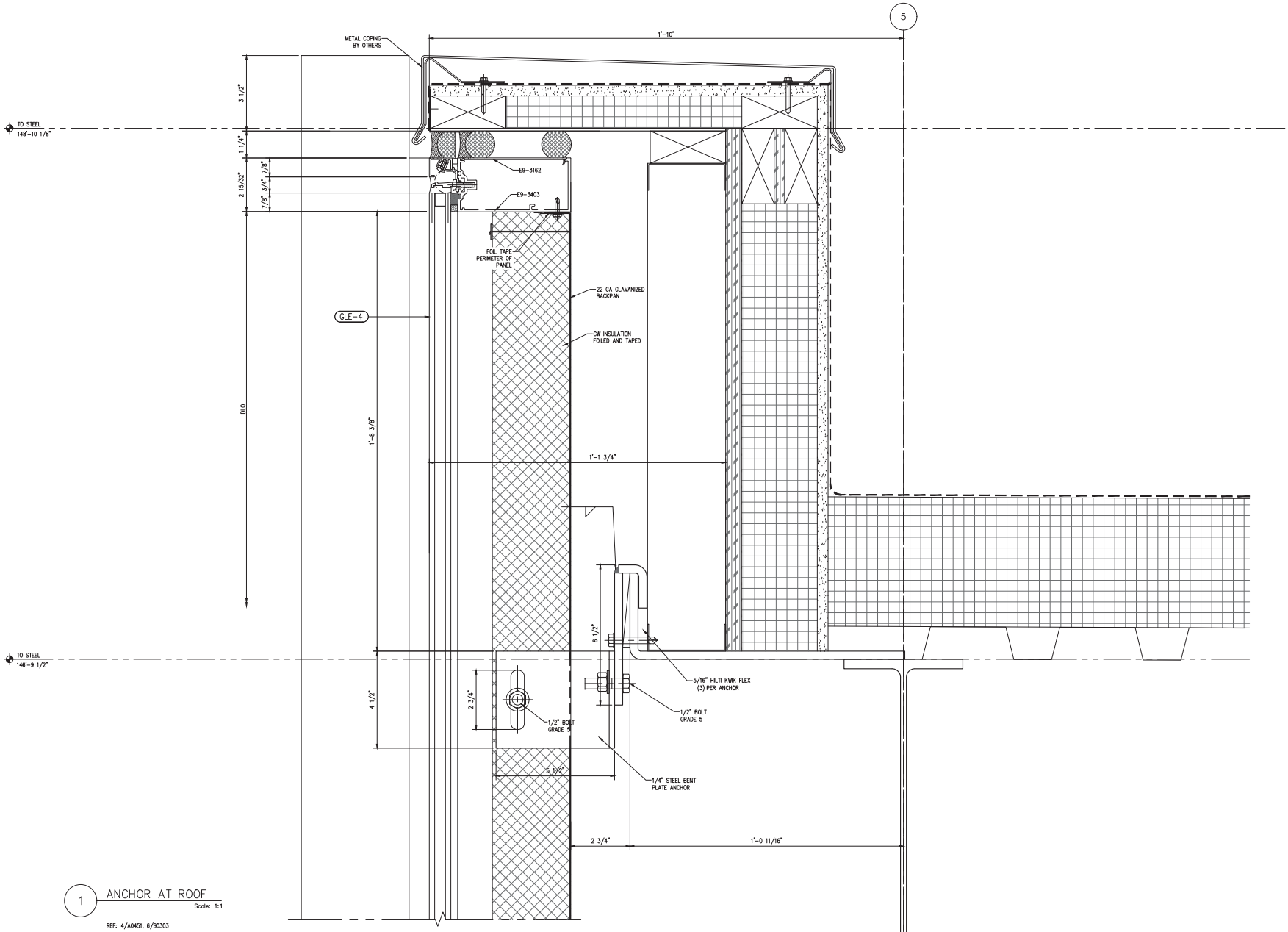

1 ANCHOR AT ROOF

Scale: 1:1

REF: 4/A0451, 6/S0303

NGG LTD

NGG LTD, INCORPORATED
1550 Craigshire Road Suite 202
St. Louis, Missouri 63146

Tel 314-336-2515
Fax 314-336-2521

Professional Seal 02/28/2017

STATE OF MISSOURI
STEWART P. FOKE
PE-24002
PROFESSIONAL ENGINEER

The seal on these plans are not valid with out electronic seal on cover.

Sub. No.	Rev. No.	Date	Drawn By	Submittal/Revision Description
4	3	11/28/16	IY	3RD SUBMISSION
3	2	11/8/16	IY	2ND SUBMISSION
2	1	10/19/16	IY	1ST SUBMISSION
1	–	8/10/16	IY	

Proprietary Notice

This drawing sheet and contents herein are property of NGG. Use of this drawing, contents or design concepts for purposes other than estimating, drawing preparation and/or manufacturing for NGG shall be cause for legal recourse by NGG.

Project Name
WEBSTER UNIVERSITY
Location
St. Louis, Missouri

Architect
CANNON DESIGN
Location
St. Louis, MO

Contractor
PARIC
Location
St. Louis, Missouri

Owner
WEBSTER UNIVERSITY
Location
St. Louis, Missouri

Drawn Date	Scale
8/10/16	AS NOTED

NGG Project No.

Drawing Title
DETAILS

Drawn By	Sheet No.
IY	317

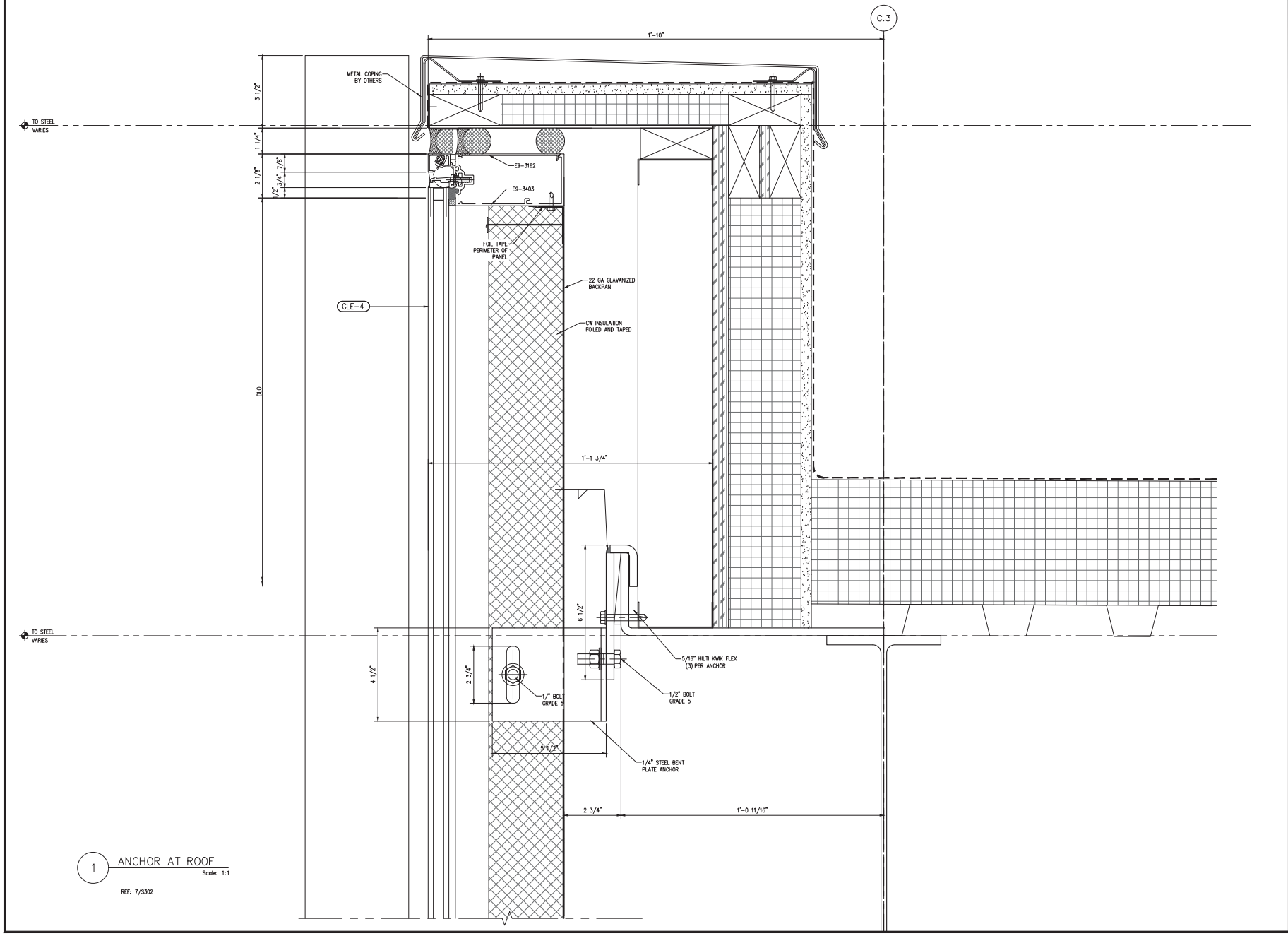

1 ANCHOR AT ROOF

Scale: 1:1

REF: 7/S302

NGG LTD

NGG LTD, INCORPORATED
1550 Craigshire Road Suite 202
St. Louis, Missouri 63146

Tel 314-336-2515
Fax 314-336-2521

Professional Seal 02/28/2017

STATE OF MISSOURI
STEWART P. FOSE
PE-24002
PROFESSIONAL ENGINEER

The seal on these plans are not valid with out electronic seal on cover.

Sub. No.	Rev. No.	Date	Drawn By	Submittal/Revision Description
4	3	11/29/16	IY	3RD SUBMISSION
3	2	11/8/16	IY	2ND SUBMISSION
2	1	10/19/16	IY	1ST SUBMISSION
1	-	8/10/16	IY	

Proprietary Notice

This drawing sheet and contents herein are property of NGG. Use of this drawing, contents or design concepts for purposes other than estimating, drawing preparation and/or manufacturing for NGG shall be cause for legal recourse by NGG.

Project Name
WEBSTER UNIVERSITY
Location
St. Louis, Missouri

Architect
CANNON DESIGN
Location
St. Louis, MO

Contractor
PARIC
Location
St. Louis, Missouri

Owner
WEBSTER UNIVERSITY
Location
St. Louis, Missouri

Drawn Date	Scale
8/10/16	AS NOTED

NGG Project No.

Drawing Title
DETAILS

Drawn By	Sheet No.
IY	318

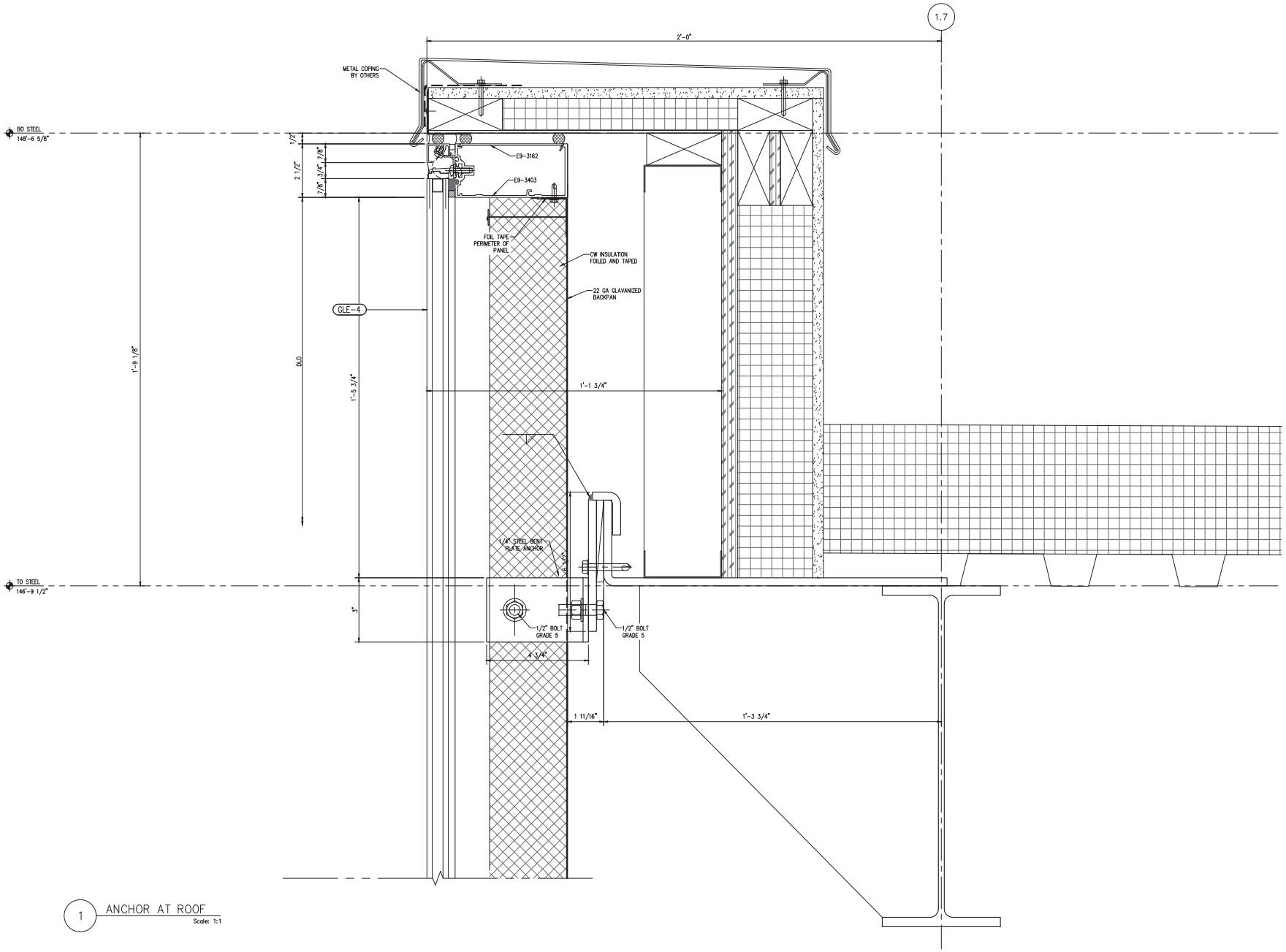

1 ANCHOR AT ROOF
Scale: 1:1

NGG LTD

NGG LTD, INCORPORATED
1550 Craigshire Road Suite 202
St. Louis, Missouri 63146

Tel 314-336-2515
Fax 314-336-2521

Professional Seal 02/28/2017

STATE OF MISSOURI
STEWART P. FISKE
PE-24002
PROFESSIONAL ENGINEER

The seal on these plans are not valid with out electronic seal on cover.

Sub. No.	Rev. No.	Date	Drawn By	Submittal/Revision Description
4	3	11/28/16	IY	3RD SUBMISSION
3	2	11/8/16	IY	2ND SUBMISSION
2	1	10/19/16	IY	1ST SUBMISSION
1	-	8/10/16	IY	

Proprietary Notice

This drawing sheet and contents herein are property of NGG. Use of this drawing, contents or design concepts for purposes other than estimating, drawing preparation and/or manufacturing for NGG shall be cause for legal recourse by NGG.

Project Name
WEBSTER UNIVERSITY
Location
St. Louis, Missouri

Architect
CANNON DESIGN
Location
St. Louis, MO

Contractor
PARIC
Location
St. Louis, Missouri

Owner
WEBSTER UNIVERSITY
Location
St. Louis, Missouri

Drawn Date	Scale
8/10/16	AS NOTED

NGG Project No.

Drawing Title
DETAILS

Drawn By	Sheet No.
IY	319

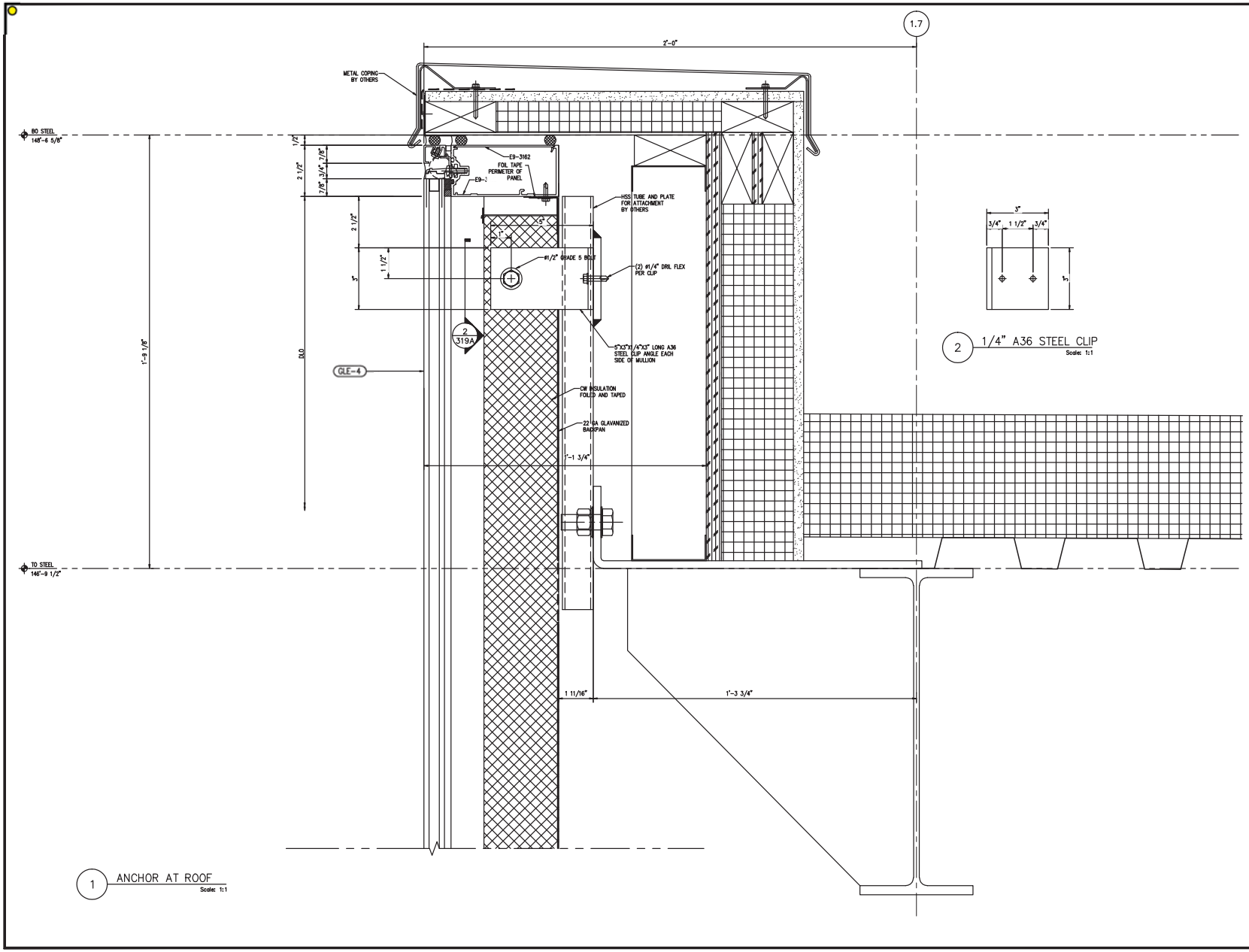

NGG LTD

NGG LTD, INCORPORATED
1850 Craigshire Road Suite 202
St. Louis, Missouri 63146

Tel 314-336-2515
Fax 314-336-2521

Professional Seal 02/28/2017

The seals on these plans are not valid with out electronic seal on cover

Sub. No.	Rev. No.	Date	Drawn By	Submittal/Revision Description
1	4	02/23/17	RS	STEL SUBMISSION

Proprietary Notice

This drawing sheet and contents herein are property of NGG. Use of this drawing, contents or design concepts for purposes other than estimating, drawing preparation and/or manufacturing for NGG shall be cause for legal recourse by NGG.

Project Name
WEBSTER UNIVERSITY
Location
St. Louis, Missouri

Architect
CANNON DESIGN
Location
St. Louis, MO

Contractor
PARIC
Location
St. Louis, Missouri

Owner
WEBSTER UNIVERSITY
Location
St. Louis, Missouri

Drawn Date	Scale
02/23/17	AS NOTED

NGG Project No.
10047

Drawing Title
DETAILS

Drawn By	Sheet No.
IY	319A

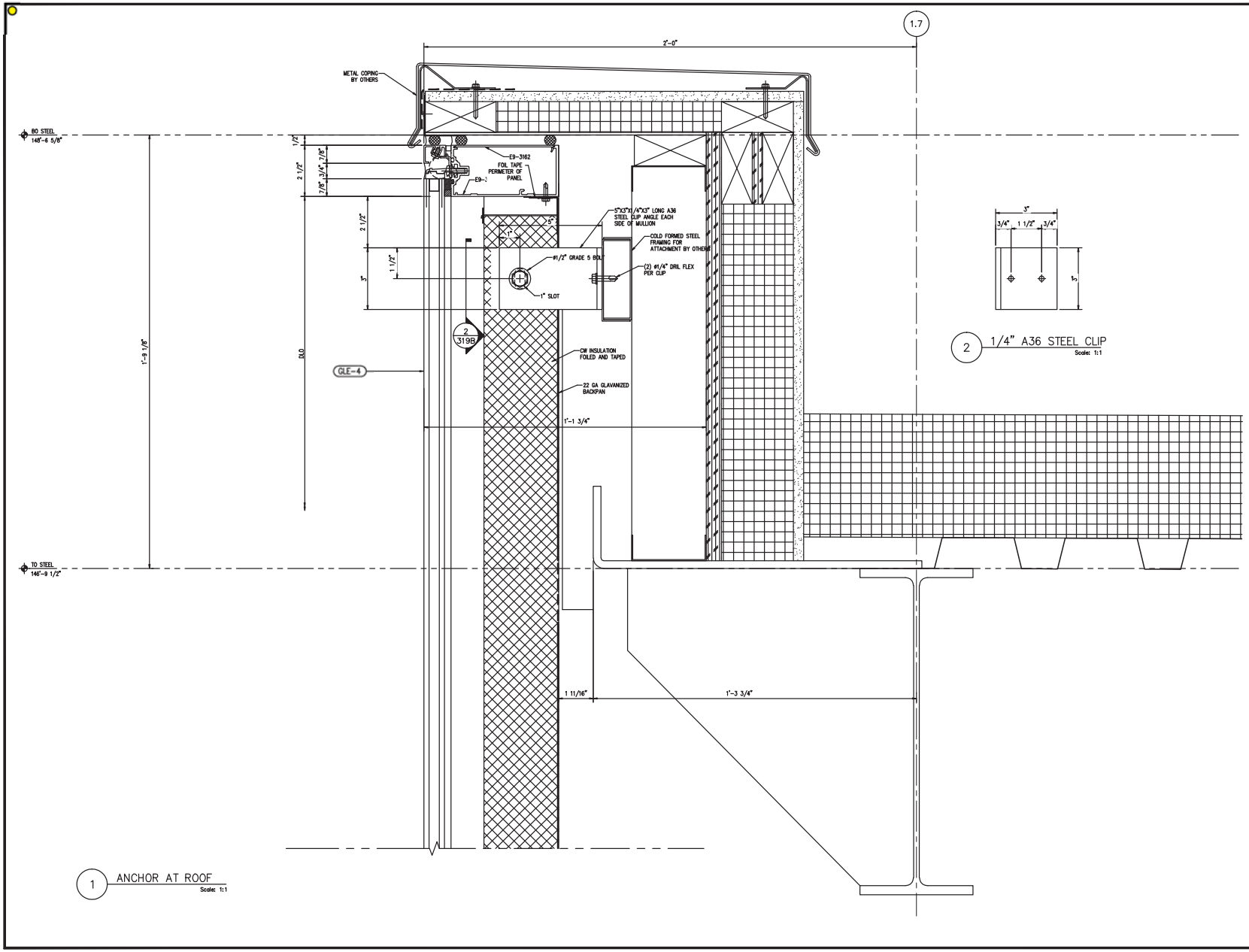

NGG LTD

NGG LTD, INCORPORATED
1850 Craigshire Road Suite 202
St. Louis, Missouri 63146

Tel 314-336-2515
Fax 314-336-2521

Professional Seal 02/28/2017

STATE OF MISSOURI
STEWART P. JESKE
NUMBER PE-24002
PROFESSIONAL ENGINEER

The seal on the plans are not valid with out electronic seal on cover

Sub. No.	Rev. No.	Date	Drawn. By	Submittal/Revision Description
1	4	02/23/17	RS	STEL SUBMISSION

Proprietary Notice

This drawing sheet and contents herein are property of NGG. Use of this drawing, contents or design concepts for purposes other than estimating, drawing preparation and/or manufacturing for NGG shall be cause for legal recourse by NGG.

Project Name
WEBSTER UNIVERSITY
Location
St. Louis, Missouri

Architect
CANNON DESIGN
Location
St. Louis, MO

Contractor
PARIC
Location
St. Louis, Missouri

Owner
WEBSTER UNIVERSITY
Location
St. Louis, Missouri

Drawn Date	Scale
02/23/17	AS NOTED

NGG Project No.
10047

Drawing Title
DETAILS

Drawn By	Sheet No.
IY	319B

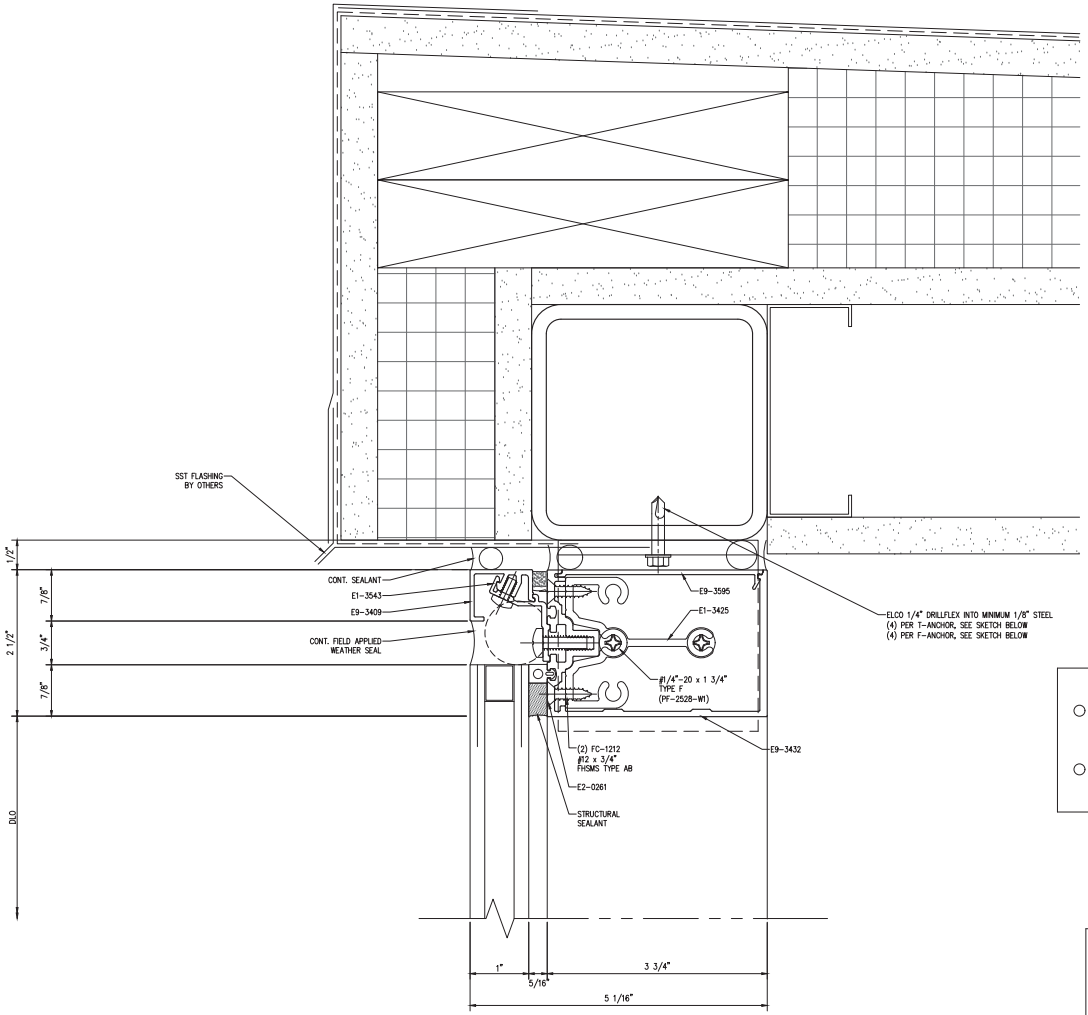

1 HEAD DETAIL

REF. 7/A0451 Scale: 1:1

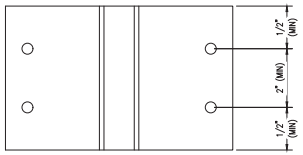

T-ANCHOR

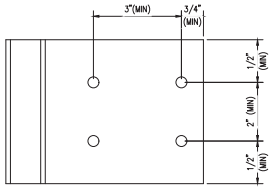

F-ANCHOR

NGG LTD

NGG LTD, INCORPORATED
1550 Craigshire Road Suite 202
St. Louis, Missouri 63146

Tel 314-336-2515
Fax 314-336-2521

Professional Seal 02/28/2017

STATE OF MISSOURI
STEWART P. FOKE
NUMBER PE-24002
PROFESSIONAL ENGINEER

The seal on these plans are not valid with out electronic seal on cover.

Sub. No.	Rev. No.	Date	Drawn. By	Submittal/Revision Description
4	3	11/28/16	IY	4TH SUBMISSION
3	2	11/8/16	IY	3RD SUBMISSION
2	1	10/19/16	IY	2ND SUBMISSION
1	–	8/10/16	IY	1ST SUBMISSION

Proprietary Notice

This drawing sheet and contents herein are property of NGG. Use of this drawing, contents or design concepts for purposes other than estimating, drawing preparation and/or manufacturing for NGG shall be cause for legal recourse by NGG.

Project Name
WEBSTER UNIVERSITY
Location
St. Louis, Missouri

Architect
CANNON DESIGN
Location
St. Louis, MO

Contractor
PARIC
Location
St. Louis, Missouri

Owner
WEBSTER UNIVERSITY
Location
St. Louis, Missouri

Drawn Date	Scale
8/10/16	AS NOTED

NGG Project No.

Drawing Title
DETAILS

Drawn By	Sheet No.
IY	320

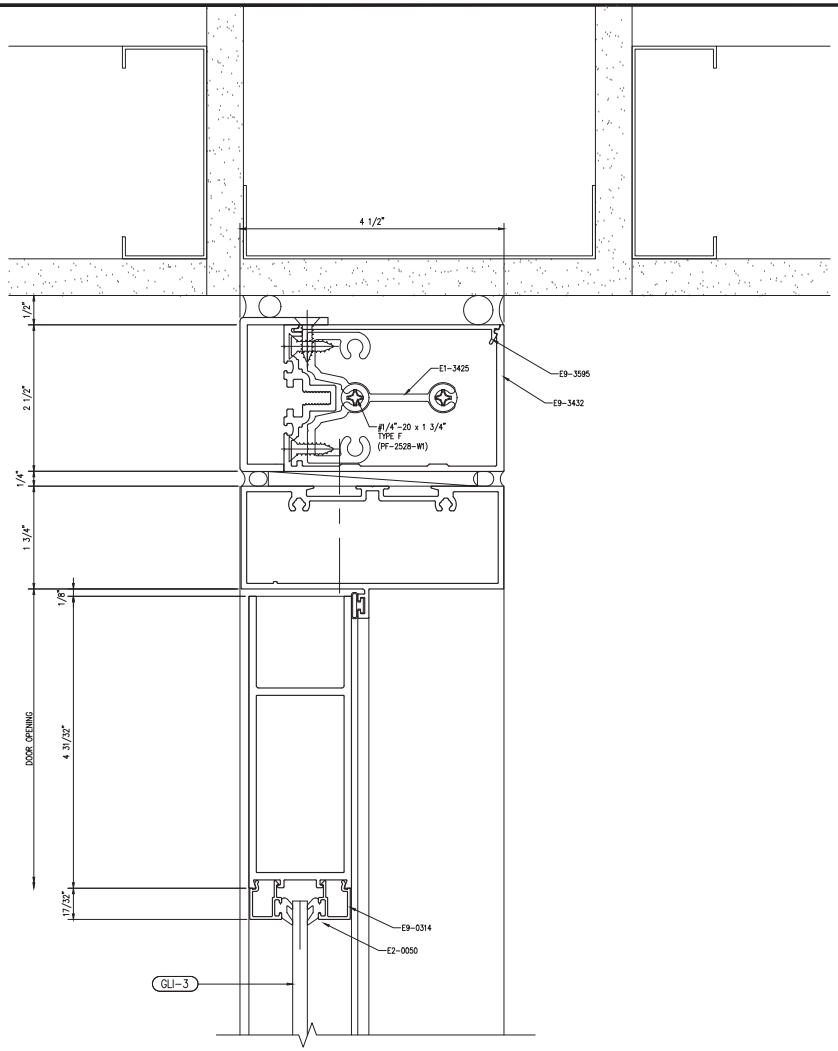

1 DOOR HEAD

Scale: 1:1

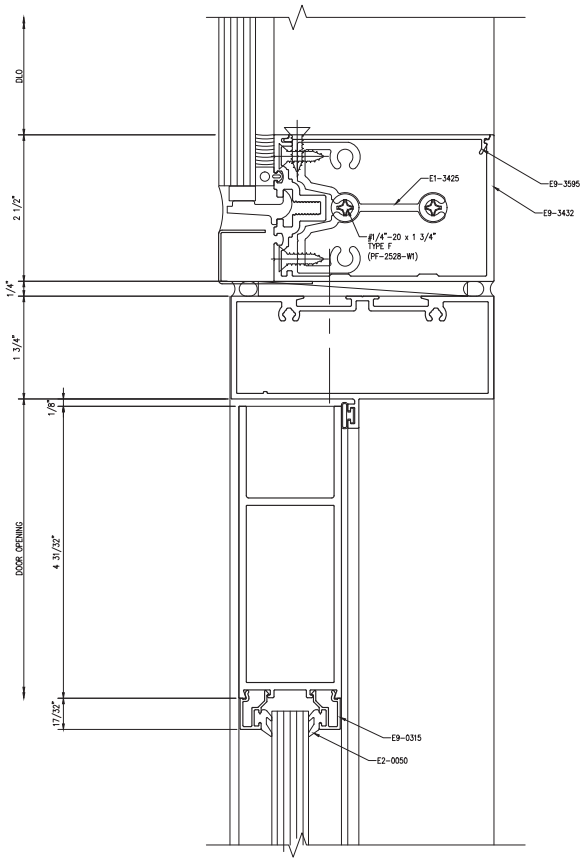

2 DOOR HEAD

Scale: 1:1

NGG LTD

NGG LTD, INCORPORATED
1550 Craigshire Road Suite 202
St. Louis, Missouri 63146

Tel 314-336-2515
Fax 314-336-2521

Professional Seal 02/28/2017

STATE OF MISSOURI
STEWART P. FOKE
NUMBER
PE-24002
PROFESSIONAL ENGINEER

The seal on these plans are not valid with out electronic seal on cover.

Sub. No.	Rev. No.	Date	Drawn By	Submittal/Revision Description
3	2	11/8/16	IY	3RD SUBMISSION
2	1	10/19/16	IY	2ND SUBMISSION
1	–	8/10/16	IY	1ST SUBMISSION

Proprietary Notice

This drawing sheet and contents herein are property of NGG. Use of this drawing, contents or design concepts for purposes other than estimating, drawing preparation and/or manufacturing for NGG shall be cause for legal recourse by NGG.

Project Name
WEBSTER UNIVERSITY
Location
St. Louis, Missouri

Architect
CANNON DESIGN
Location
St. Louis, MO

Contractor
PARIC
Location
St. Louis, Missouri

Owner
WEBSTER UNIVERSITY
Location
St. Louis, Missouri

Drawn Date	Scale
8/10/16	AS NOTED

NGG Project No.

Drawing Title
DETAILS

Drawn By	Sheet No.
IY	321

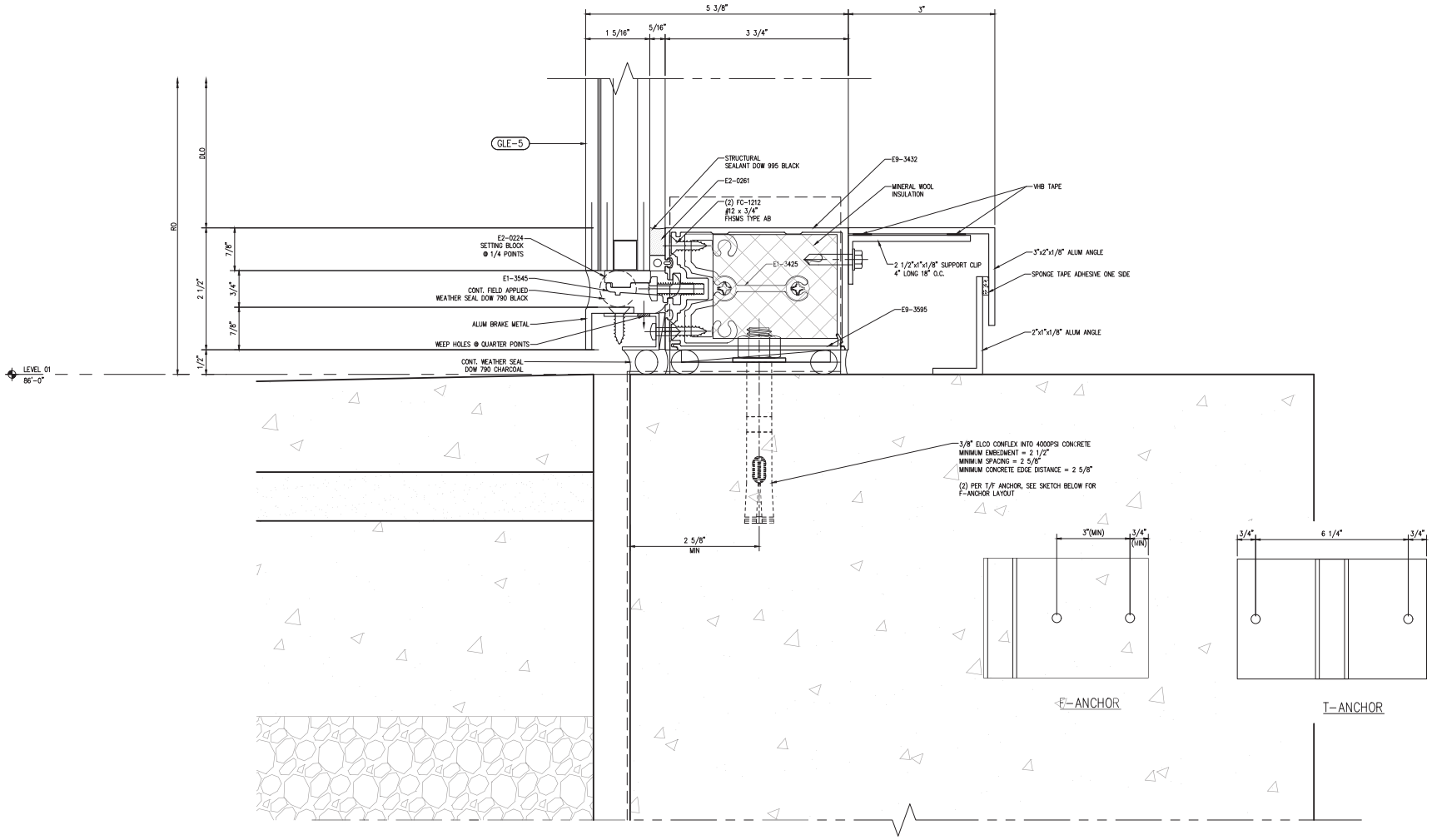

1 SILL DETAIL

Scale: 1:1

NGG LTD

NGG LTD, INCORPORATED
1550 Craigshire Road Suite 202
St. Louis, Missouri 63146

Tel 314-336-2515
Fax 314-336-2521

Professional Seal 02/28/2017

STATE OF MISSOURI
STEWART P. FOKE
NUMBER PE-24002
PROFESSIONAL ENGINEER

The seal on these plans are not valid with out electronic seal on cover.

Sub. No.	Rev. No.	Date	Drawn By	Submittal/Revision Description
3	2	11/8/16	IY	3RD SUBMISSION
2	1	10/19/16	IY	2ND SUBMISSION
1	–	8/10/16	IY	1ST SUBMISSION

Proprietary Notice

This drawing sheet and contents herein are property of NGG. Use of this drawing, contents or design concepts for purposes other than estimating, drawing preparation and/or manufacturing for NGG shall be cause for legal recourse by NGG.

Project Name
WEBSTER UNIVERSITY
Location
St. Louis, Missouri

Architect
CANNON DESIGN
Location
St. Louis, MO

Contractor
PARIC
Location
St. Louis, Missouri

Owner
WEBSTER UNIVERSITY
Location
St. Louis, Missouri

Drawn Date	Scale
8/10/16	AS NOTED

NGG Project No.

Drawing Title
DETAILS

Drawn By	Sheet No.
IY	322

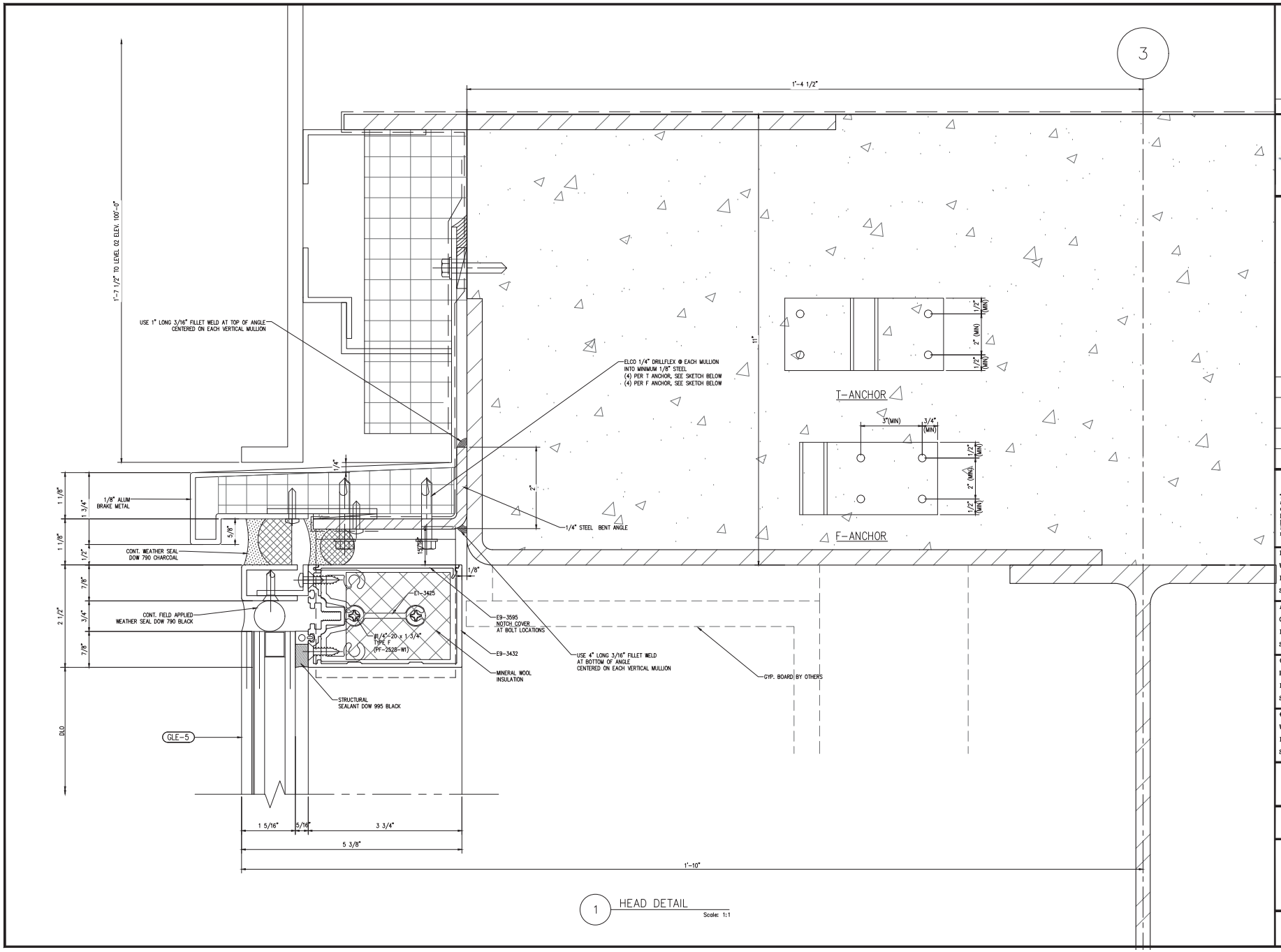

1 HEAD DETAIL

Scale: 1:1

NGG LTD

NGG LTD, INCORPORATED
1850 Craigshire Road Suite 202
St. Louis, Missouri 63146

Tel 314-336-2515
Fax 314-336-2521

Professional Seal 02/28/2017

STATE OF MISSOURI
STEWART P. ASKE
NUMBER PE-24002
PROFESSIONAL ENGINEER

The seal on these plans are not valid with out electronic seal on cover.

Sub. No.	Rev. No.	Date	Drawn By	Submittal/Revision Description
3	2	11/8/16	IY	3RD SUBMISSION
2	1	10/19/16	IY	2ND SUBMISSION
1	–	8/10/16	IY	1ST SUBMISSION

Proprietary Notice

This drawing sheet and contents herein are property of NGG. Use of this drawing, contents or design concepts for purposes other than estimating, drawing preparation and/or manufacturing for NGG shall be cause for legal recourse by NGG.

Project Name
WEBSTER UNIVERSITY
Location
St. Louis, Missouri

Architect
CANNON DESIGN
Location
St. Louis, MO

Contractor
PARIC
Location
St. Louis, Missouri

Owner
WEBSTER UNIVERSITY
Location
St. Louis, Missouri

Drawn Date	Scale
8/10/16	AS NOTED

NGG Project No.

Drawing Title
DETAILS

Drawn By	Sheet No.
IY	323

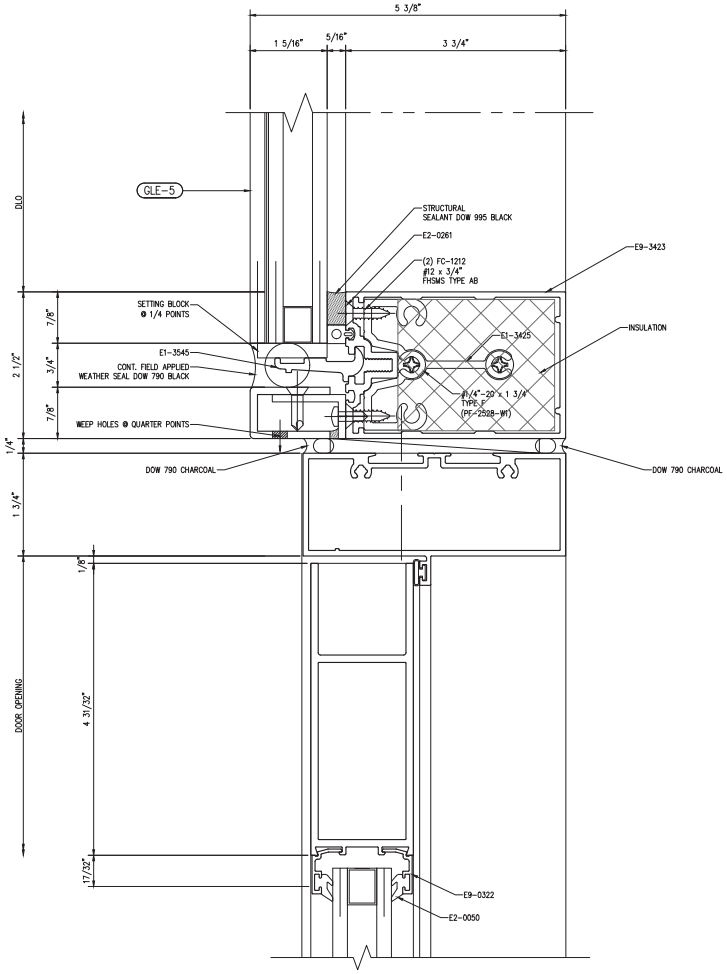

1 DOOR HEAD DETAIL
Scale: 1:1

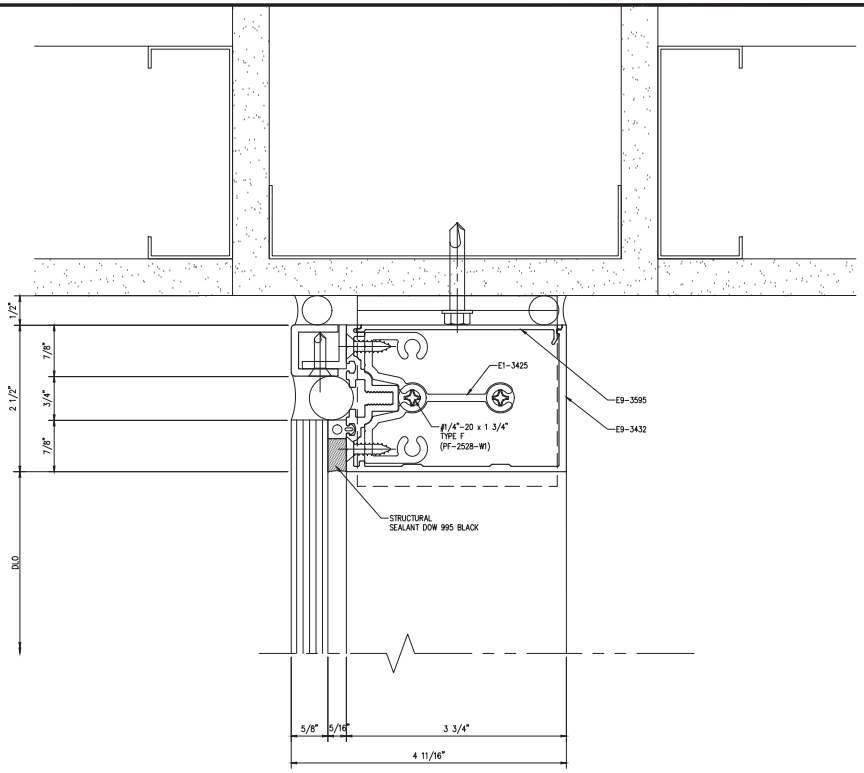

2 HEAD DETAIL
Scale: 1:1

NGG LTD

NGG LTD, INCORPORATED
1850 Craigshire Road Suite 202
St. Louis, Missouri 63146

Tel 314-336-2515
Fax 314-336-2521

Professional Seal 02/28/2017

STATE OF MISSOURI
STEWART P. FOKE
PE-24002
PROFESSIONAL ENGINEER

The seal on these plans are not valid with out electronic seal on cover.

Sub. No.	Rev. No.	Date	Drawn By	Submittal/Revision Description
3	2	11/8/16	IY	3RD SUBMISSION
2	1	10/19/16	IY	2ND SUBMISSION
1	-	8/10/16	IY	1ST SUBMISSION

Proprietary Notice

This drawing sheet and contents herein are property of NGG. Use of this drawing, contents or design concepts for purposes other than estimating, drawing preparation and/or manufacturing for NGG shall be cause for legal recourse by NGG.

Project Name
WEBSTER UNIVERSITY
Location
St. Louis, Missouri

Architect
CANNON DESIGN
Location
St. Louis, MO

Contractor
PARIC
Location
St. Louis, Missouri

Owner
WEBSTER UNIVERSITY
Location
St. Louis, Missouri

Drawn Date	Scale
8/10/16	AS NOTED

NGG Project No.

Drawing Title
DETAILS

Drawn By	Sheet No.
IY	324

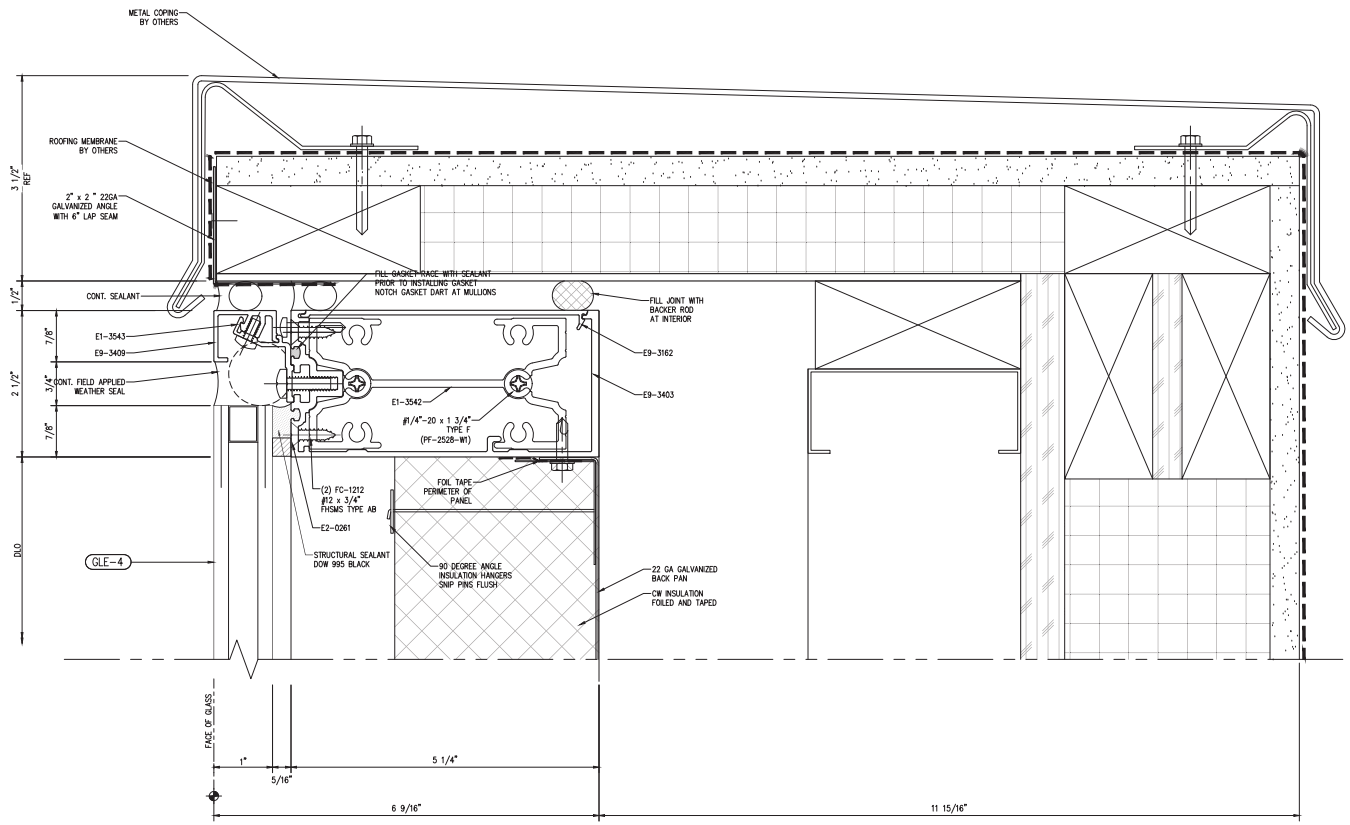

1 HEAD DETAIL

Scale: 1:1

NGG LTD

NGG LTD, INCORPORATED
1850 Craigshire Road Suite 202
St. Louis, Missouri 63146

Tel 314-336-2515
Fax 314-336-2521

Professional Seal 02/28/2017

STATE OF MISSOURI
STEWART P. FOKE
NUMBER PE-24002
PROFESSIONAL ENGINEER

The seal on these plans are not valid with out electronic seal on cover.

Sub. No.	Rev. No.	Date	Drawn. By	Submittal/Revision Description
3	2	11/8/16	IY	3RD SUBMISSION
1	-	10/19/16	IY	2ND SUBMISSION

Proprietary Notice

This drawing sheet and contents herein are property of NGG. Use of this drawing, contents or design concepts for purposes other than estimating, drawing preparation and/or manufacturing for NGG shall be cause for legal recourse by NGG.

Project Name
WEBSTER UNIVERSITY
Location
St. Louis, Missouri

Architect
CANNON DESIGN
Location
St. Louis, MO

Contractor
PARIC
Location
St. Louis, Missouri

Owner
WEBSTER UNIVERSITY
Location
St. Louis, Missouri

Drawn Date	Scale
8/10/16	AS NOTED

NGG Project No.

Drawing Title
DETAILS

Drawn By	Sheet No.
IY	325

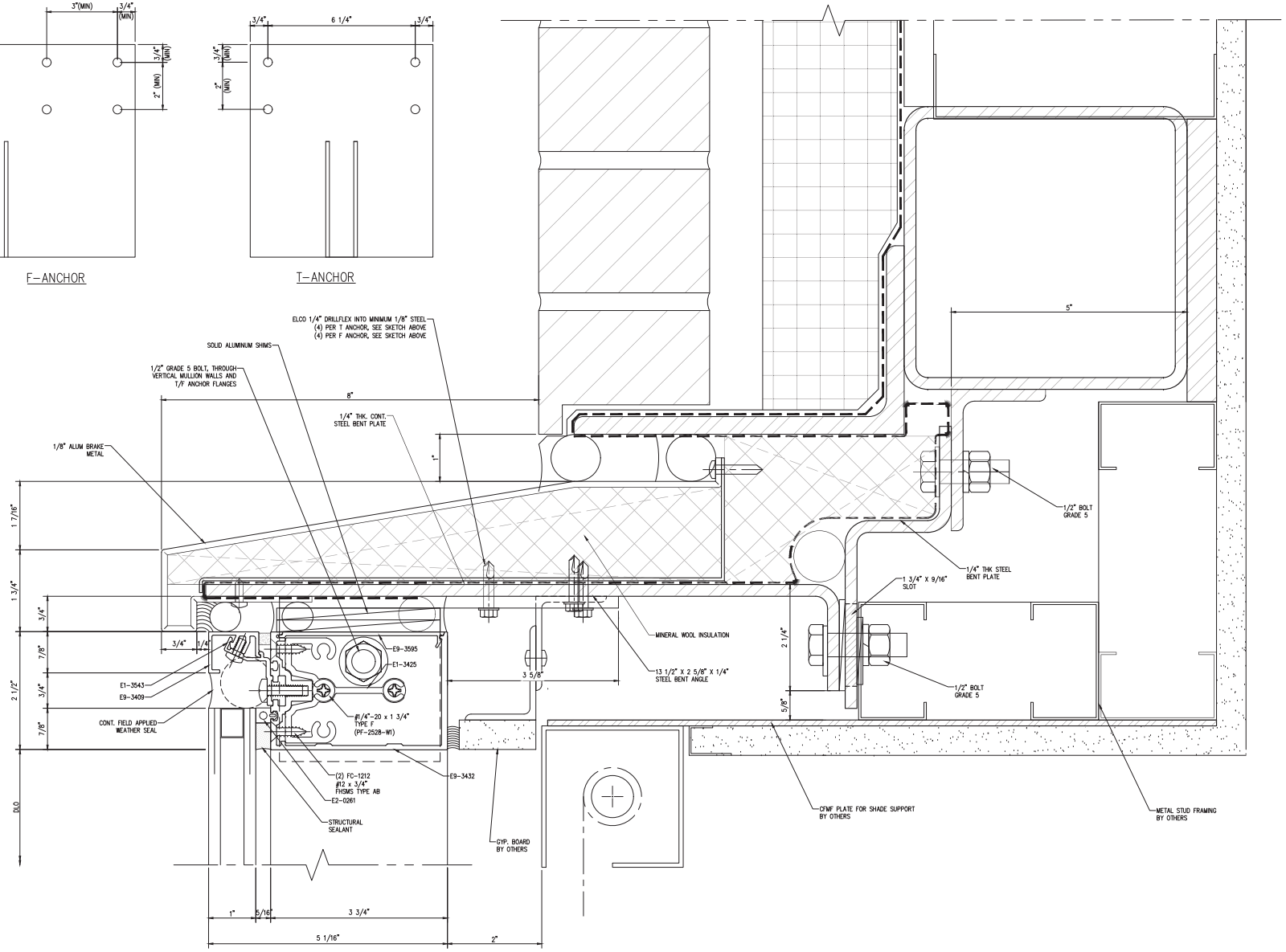

1 HEAD DETAIL

Scale: 1:1

NGG LTD

NGG LTD, INCORPORATED
1850 Craigshire Road Suite 202
St. Louis, Missouri 63146

Tel 314-336-2515
Fax 314-336-2521

Professional Seal 02/28/2017

STATE OF MISSOURI
STEWART P. FOKE
PE-24002
PROFESSIONAL ENGINEER

The seal on these plans are not valid with out electronic seal on cover.

Sub. No.	Rev. No.	Date	Drawn. By	Submittal/Revision Description
4	3	11/28/16	IY	4TH SUBMISSION
3	2	11/8/16	IY	3RD SUBMISSION
2	1	10/19/16	IY	2ND SUBMISSION
1	–	8/10/16	IY	1ST SUBMISSION

Proprietary Notice

This drawing sheet and contents herein are property of NGG. Use of this drawing, contents or design concepts for purposes other than estimating, drawing preparation and/or manufacturing for NGG shall be cause for legal recourse by NGG.

Project Name
WEBSTER UNIVERSITY
Location
St. Louis, Missouri

Architect
CANNON DESIGN
Location
St. Louis, MO

Contractor
PARIC
Location
St. Louis, Missouri

Owner
WEBSTER UNIVERSITY
Location
St. Louis, Missouri

Drawn Date	Scale
8/10/16	AS NOTED

NGG Project No.

Drawing Title
DETAILS

Drawn By	Sheet No.
IY	351

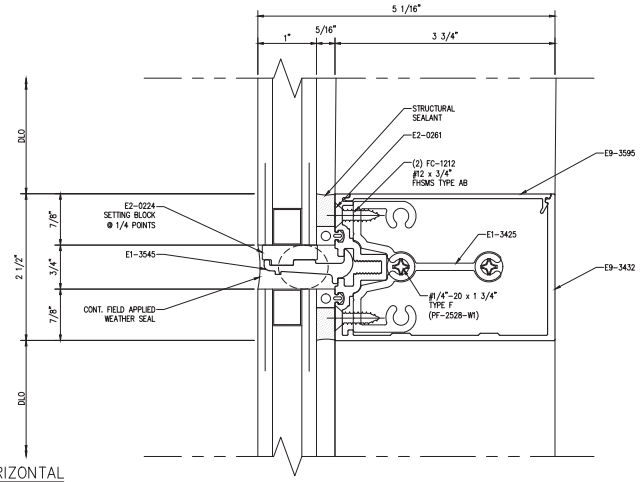

2 INTERMEDIATE HORIZONTAL

Scale: 1:1

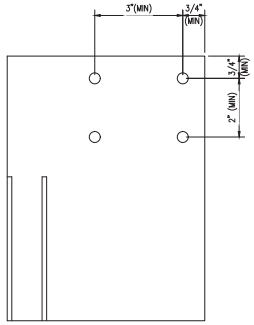

F-ANCHOR

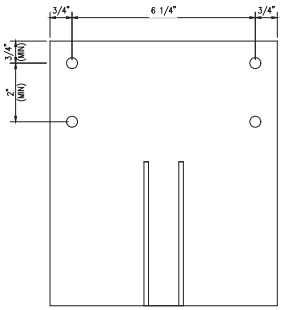

T-ANCHOR

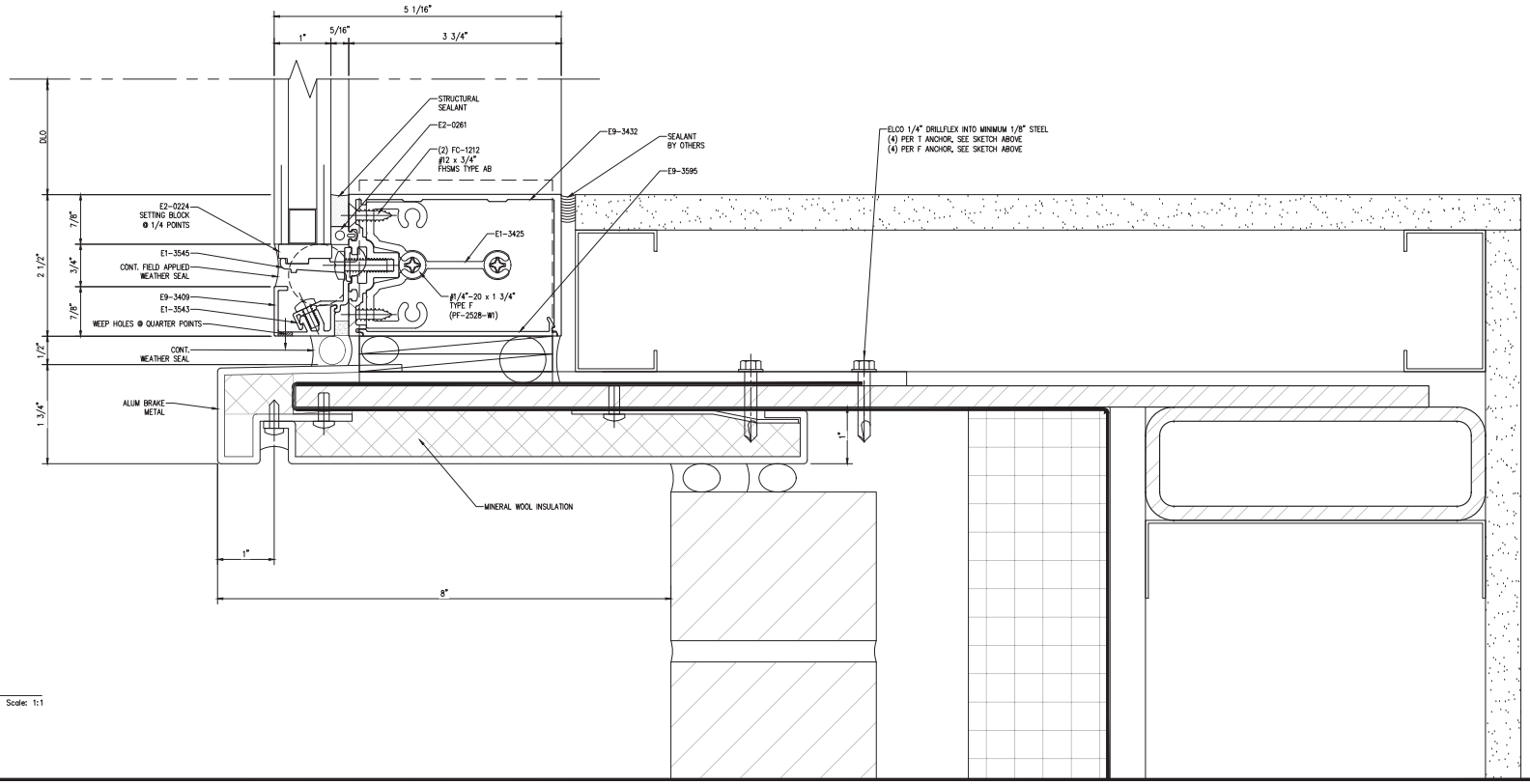

1 SILL DETAIL

Scale: 1:1

NGG LTD

NGG LTD, INCORPORATED
1850 Craigshire Road Suite 202
St. Louis, Missouri 63146

Tel 314-336-2515
Fax 314-336-2521

Professional Seal 02/28/2017

STATE OF MISSOURI STEWART P. ASKE PE-24002 PROFESSIONAL ENGINEER

The seal on these plans are not valid with out electronic seal on cover.

Sub. No.	Rev. No.	Date	Drawn. By	Submittal/Revision Description
4	3	11/28/16	IY	4TH SUBMISSION
3	2	11/8/16	IY	3RD SUBMISSION
2	1	10/19/16	IY	2ND SUBMISSION
1	-	8/10/16	IY	1ST SUBMISSION

Proprietary Notice

This drawing sheet and contents herein are property of NGG. Use of this drawing, contents or design concepts for purposes other than estimating, drawing preparation and/or manufacturing for NGG shall be cause for legal recourse by NGG.

Project Name
WEBSTER UNIVERSITY
Location
St. Louis, Missouri

Architect
CANNON DESIGN
Location
St. Louis, MO

Contractor
PARIC
Location
St. Louis, Missouri

Owner
WEBSTER UNIVERSITY
Location
St. Louis, Missouri

Drawn Date	Scale
8/10/16	AS NOTED

NGG Project No.

Drawing Title
DETAILS

Drawn By	Sheet No.
IY	352

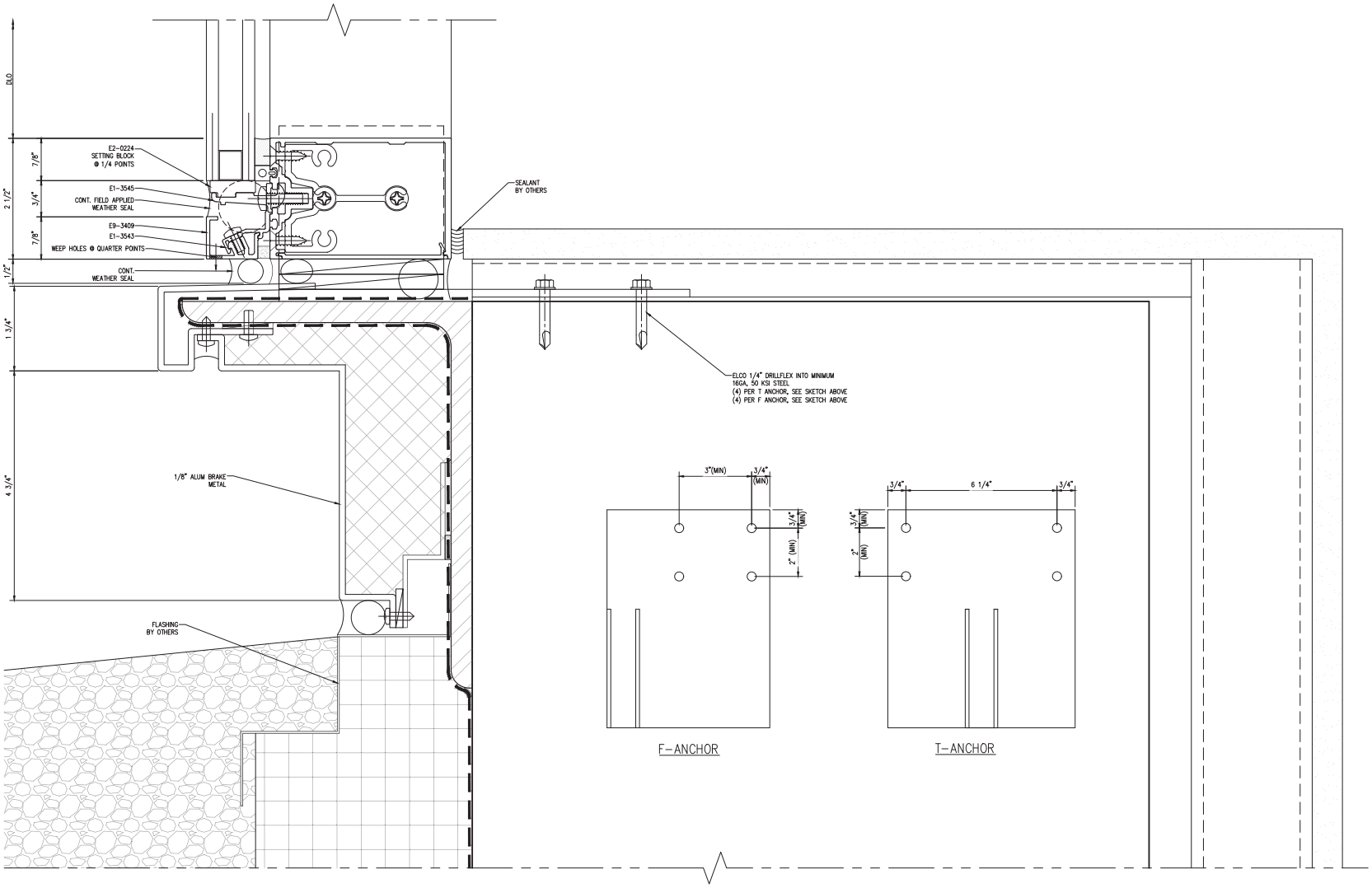

1 SILL DETAIL

Scale: 1:1

NGG LTD

NGG LTD, INCORPORATED
1550 Craigshire Road Suite 202
St. Louis, Missouri 63146

Tel 314-336-2515
Fax 314-336-2521

Professional Seal 02/28/2017

STATE OF MISSOURI
STEWART P. ESKE
PE-24002
PROFESSIONAL ENGINEER

The seal on these plans are not valid with out electronic seal on cover.

Sub. No.	Rev. No.	Date	Drawn By	Submittal/Revision Description
4	3	11/29/16	IY	4TH SUBMISSION
3	2	11/8/16	IY	3RD SUBMISSION
2	1	10/19/16	IY	2ND SUBMISSION
1	-	8/10/16	IY	1ST SUBMISSION

Proprietary Notice

This drawing sheet and contents herein are property of NGG. Use of this drawing, contents or design concepts for purposes other than estimating, drawing preparation and/or manufacturing for NGG shall be cause for legal recourse by NGG.

Project Name
WEBSTER UNIVERSITY
Location
St. Louis, Missouri

Architect
CANNON DESIGN
Location
St. Louis, MO

Contractor
PARIC
Location
St. Louis, Missouri

Owner
WEBSTER UNIVERSITY
Location
St. Louis, Missouri

Drawn Date	Scale
8/10/16	AS NOTED

NGG Project No.

Drawing Title
DETAILS

Drawn By	Sheet No.
IY	353

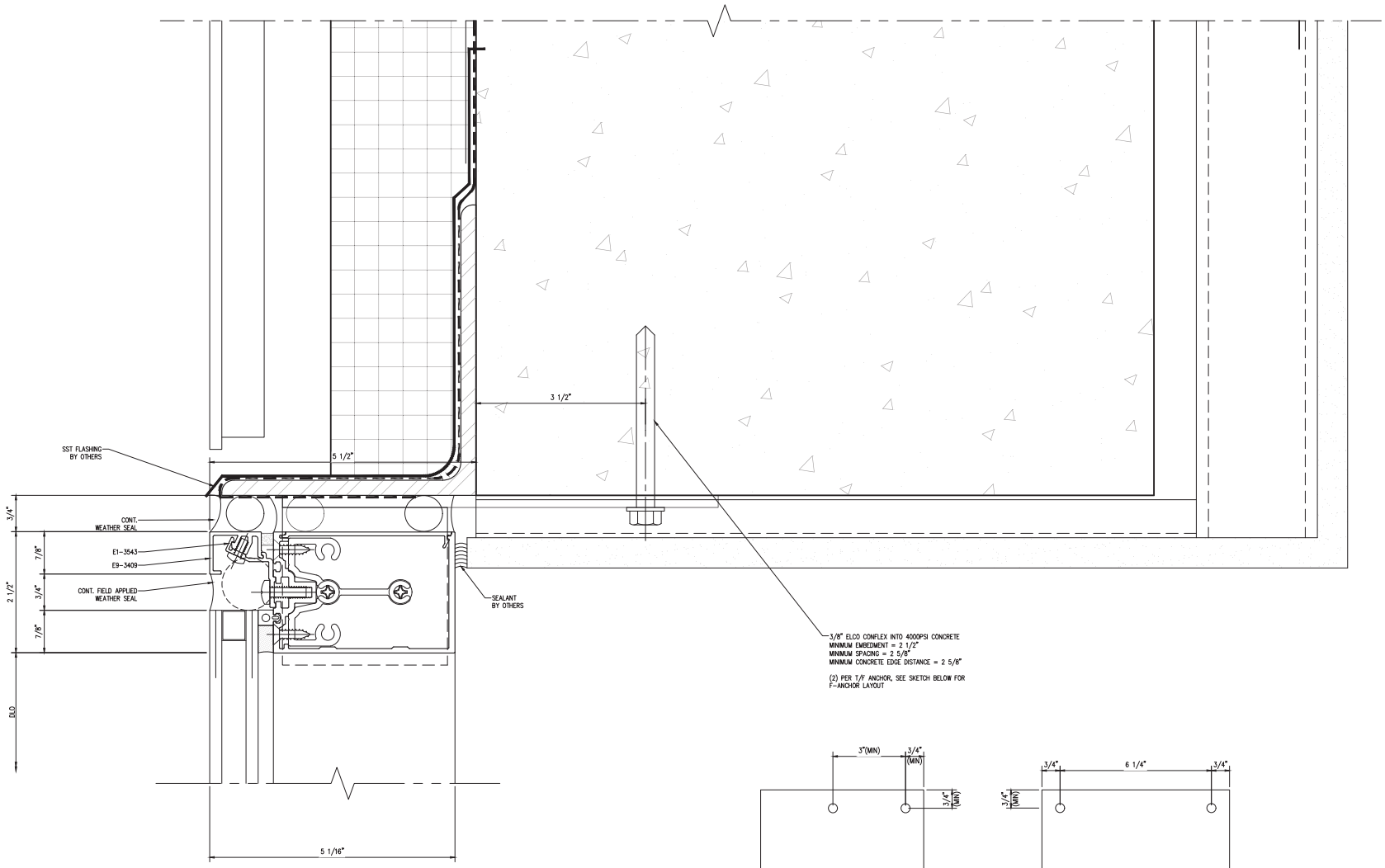

1 HEAD DETAIL

Scale: 1:1

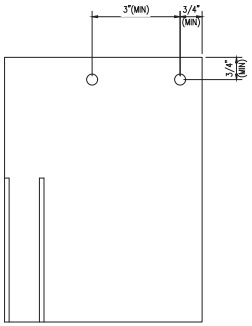

F-ANCHOR

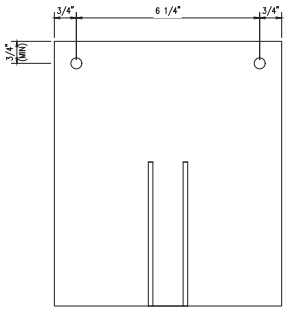

T-ANCHOR

NGG LTD

NGG LTD, INCORPORATED
1550 Craigshire Road Suite 202
St. Louis, Missouri 63146

Tel 314-336-2515
Fax 314-336-2521

Professional Seal 02/28/2017

The seal on these plans are not valid with out electronic seal on cover.

Sub. No.	Rev. No.	Date	Drawn By	Submittal/Revision Description
4	3	11/28/16	IY	4TH SUBMISSION
3	2	11/8/16	IY	3RD SUBMISSION
2	1	10/19/16	IY	2ND SUBMISSION
1	-	8/10/16	IY	1ST SUBMISSION

Proprietary Notice

This drawing sheet and contents herein are property of NGG. Use of this drawing, contents or design concepts for purposes other than estimating, drawing preparation and/or manufacturing for NGG shall be cause for legal recourse by NGG.

Project Name
WEBSTER UNIVERSITY
Location
St. Louis, Missouri

Architect
CANNON DESIGN
Location
St. Louis, MO

Contractor
PARIC
Location
St. Louis, Missouri

Owner
WEBSTER UNIVERSITY
Location
St. Louis, Missouri

Drawn Date	Scale
8/10/16	AS NOTED

NGG Project No.

Drawing Title
DETAILS

Drawn By	Sheet No.
IY	354

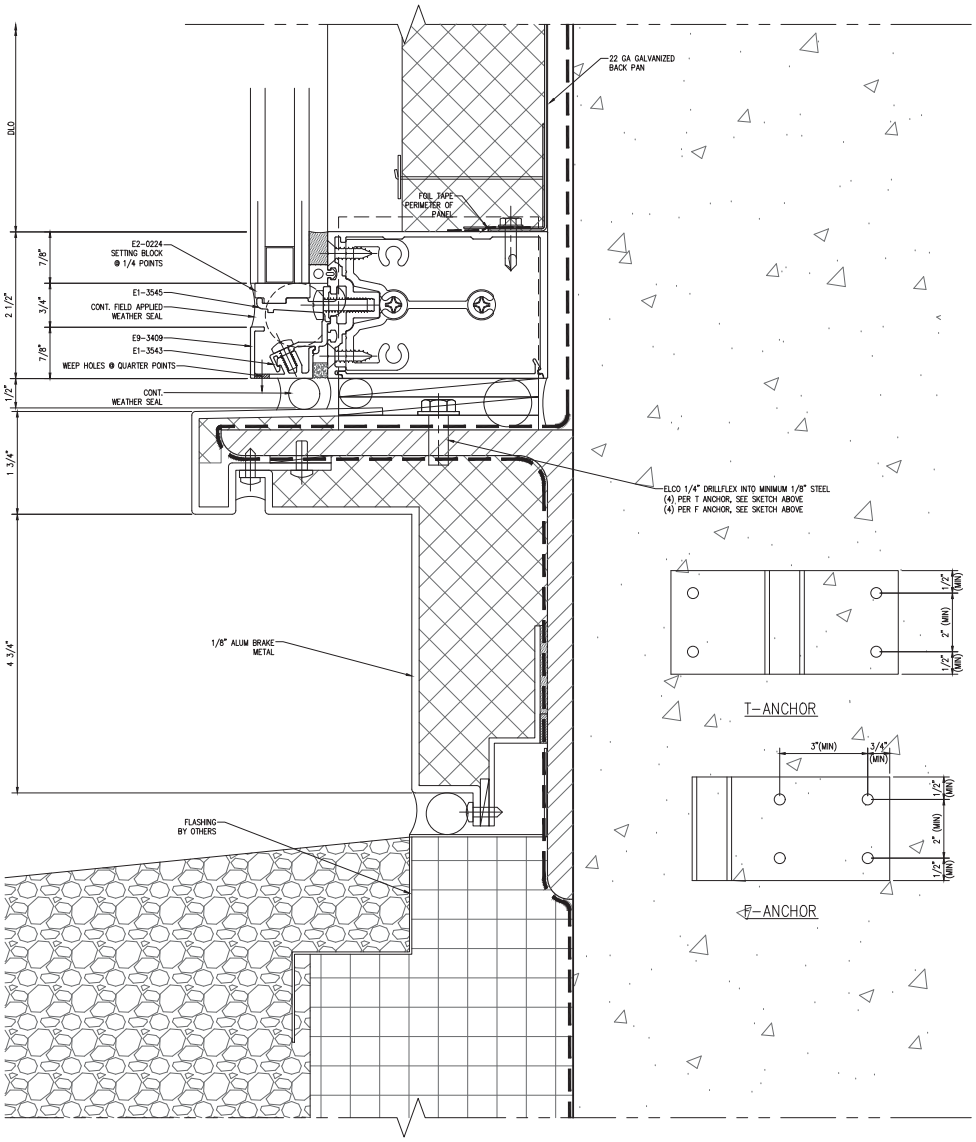

1 SILL DETAIL

Scale: 1:1

NGG LTD

NGG LTD, INCORPORATED
1550 Craigshire Road Suite 202
St. Louis, Missouri 63146

Tel 314-336-2515
Fax 314-336-2521

Professional Seal 02/28/2017

STATE OF MISSOURI
STEWART P. FOKE
NUMBER
PE-24002
PROFESSIONAL ENGINEER

The seal on these plans are not valid with out electronic seal on cover.

Sub. No.	Rev. No.	Date	Drawn. By	Submittal/Revision Description
4	3	11/28/16	IY	4TH SUBMISSION
3	2	11/8/16	IY	3RD SUBMISSION
2	1	10/19/16	IY	2ND SUBMISSION
1	–	8/10/16	IY	1ST SUBMISSION

Proprietary Notice

This drawing sheet and contents herein are property of NGG. Use of this drawing, contents or design concepts for purposes other than estimating, drawing preparation and/or manufacturing for NGG shall be cause for legal recourse by NGG.

Project Name
WEBSTER UNIVERSITY
Location
St. Louis, Missouri

Architect
CANNON DESIGN
Location
St. Louis, MO

Contractor
PARIC
Location
St. Louis, Missouri

Owner
WEBSTER UNIVERSITY
Location
St. Louis, Missouri

Drawn Date	Scale
8/10/16	AS NOTED

NGG Project No.

Drawing Title
DETAILS

Drawn By	Sheet No.
IY	355

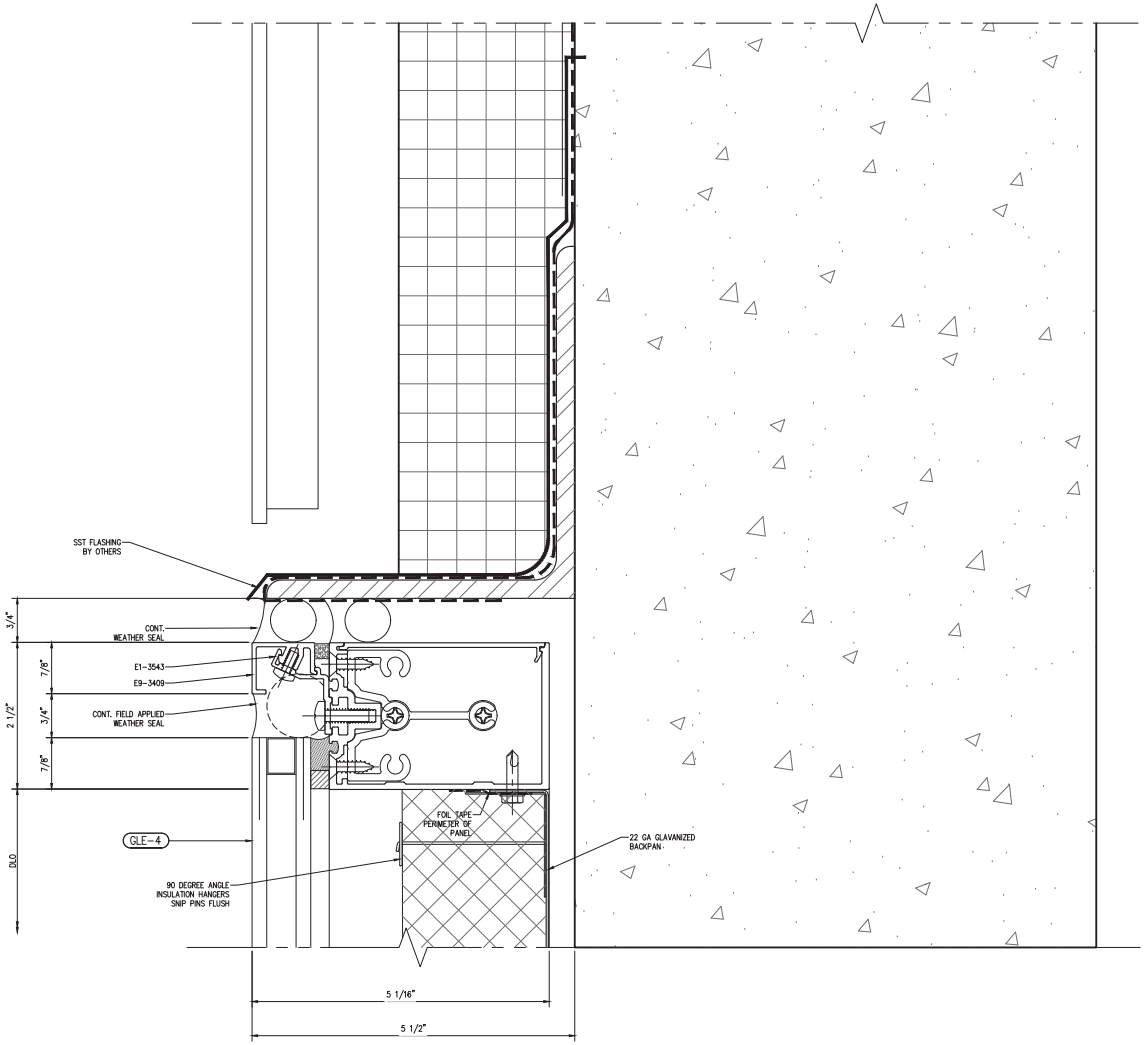

1 HEAD DETAIL

Scale: 1:1

NGG LTD

NGG LTD, INCORPORATED
1550 Craigshire Road Suite 202
St. Louis, Missouri 63146

Tel 314-336-2515
Fax 314-336-2521

Professional Seal 02/28/2017

STATE OF MISSOURI
STEWART P. ASKE
PE-24002
PROFESSIONAL ENGINEER

The seal on these plans are not valid with out electronic seal on cover.

Sub. No.	Rev. No.	Date	Drawn By	Submittal/Revision Description
4	3	11/29/16	IY	4TH SUBMISSION
3	2	11/8/16	IY	3RD SUBMISSION
2	1	10/19/16	IY	2ND SUBMISSION
1	-	8/10/16	IY	1ST SUBMISSION

Proprietary Notice

This drawing sheet and contents herein are property of NGG. Use of this drawing, contents or design concepts for purposes other than estimating, drawing preparation and/or manufacturing for NGG shall be cause for legal recourse by NGG.

Project Name
WEBSTER UNIVERSITY
Location
St. Louis, Missouri

Architect
CANNON DESIGN
Location
St. Louis, MO

Contractor
PARIC
Location
St. Louis, Missouri

Owner
WEBSTER UNIVERSITY
Location
St. Louis, Missouri

Drawn Date	Scale
8/10/16	AS NOTED

NGG Project No.

Drawing Title
DETAILS

Drawn By	Sheet No.
IY	356

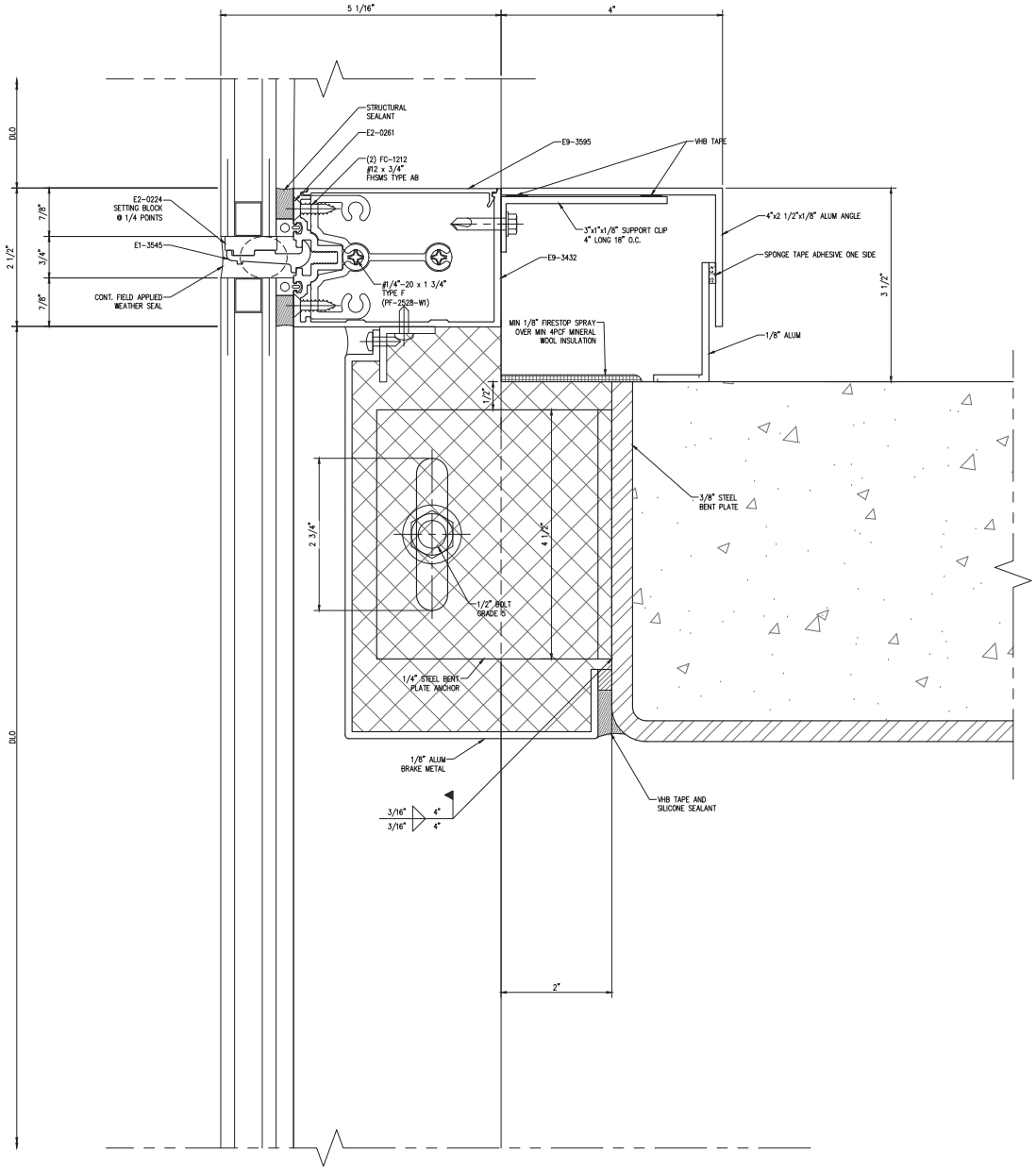

1 WIND LOAD ANCHOR
Scale: 1:1

NGG LTD

NGG LTD, INCORPORATED
1550 Craigshire Road Suite 202
St. Louis, Missouri 63146

Tel 314-336-2515
Fax 314-336-2521

Professional Seal 02/28/2017

STATE OF MISSOURI
STEWART P. FOKE
PE-24002
PROFESSIONAL ENGINEER

The seal on these plans are not valid with out electronic seal on cover.

Sub. No.	Rev. No.	Date	Drawn By	Submittal/Revision Description
4	3	11/28/16	IY	4TH SUBMISSION
3	2	11/8/16	IY	3RD SUBMISSION
2	1	10/19/16	IY	2ND SUBMISSION
1	-	8/10/16	IY	1ST SUBMISSION

Proprietary Notice

This drawing sheet and contents herein are property of NGG. Use of this drawing, contents or design concepts for purposes other than estimating, drawing preparation and/or manufacturing for NGG shall be cause for legal recourse by NGG.

Project Name
WEBSTER UNIVERSITY
Location
St. Louis, Missouri

Architect
CANNON DESIGN
Location
St. Louis, MO

Contractor
PARIC
Location
St. Louis, Missouri

Owner
WEBSTER UNIVERSITY
Location
St. Louis, Missouri

Drawn Date	Scale
8/10/16	AS NOTED

NGG Project No.

Drawing Title
DETAILS

Drawn By	Sheet No.
IY	357

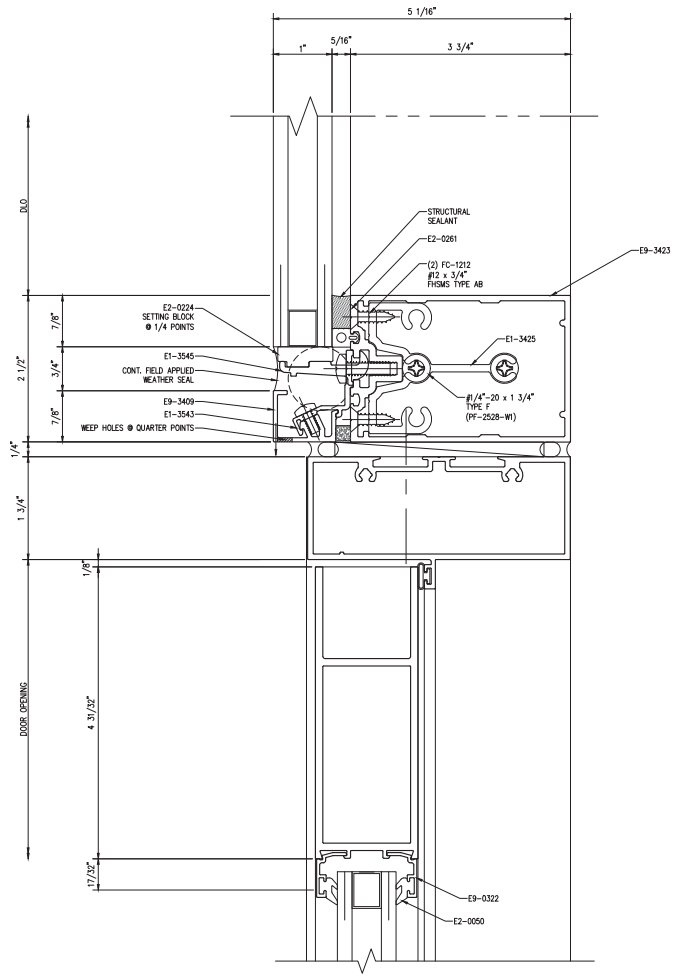

1 DOOR HEAD DETAIL
Scale: 1:1

NGG LTD

NGG LTD, INCORPORATED
1550 Craigshire Road Suite 202
St. Louis, Missouri 63146

Tel 314-336-2515
Fax 314-336-2521

Professional Seal 02/28/2017

STATE OF MISSOURI
STEWART P. FOKE
NUMBER PE-24002
PROFESSIONAL ENGINEER

The seal on these plans are not valid with out electronic seal on cover.

Sub. No.	Rev. No.	Date	Drawn. By	Submittal/Revision Description
4	3	11/29/16	IY	4TH SUBMISSION
3	2	11/8/16	IY	3RD SUBMISSION
1	-	10/19/16	IY	2ND SUBMISSION

Proprietary Notice

This drawing sheet and contents herein are property of NGG. Use of this drawing, contents or design concepts for purposes other than estimating, drawing preparation and/or manufacturing for NGG shall be cause for legal recourse by NGG.

Project Name
WEBSTER UNIVERSITY
Location
St. Louis, Missouri

Architect
CANNON DESIGN
Location
St. Louis, MO

Contractor
PARIC
Location
St. Louis, Missouri

Owner
WEBSTER UNIVERSITY
Location
St. Louis, Missouri

Drawn Date	Scale
8/10/16	AS NOTED

NGG Project No.

Drawing Title
DETAILS

Drawn By	Sheet No.
IY	359

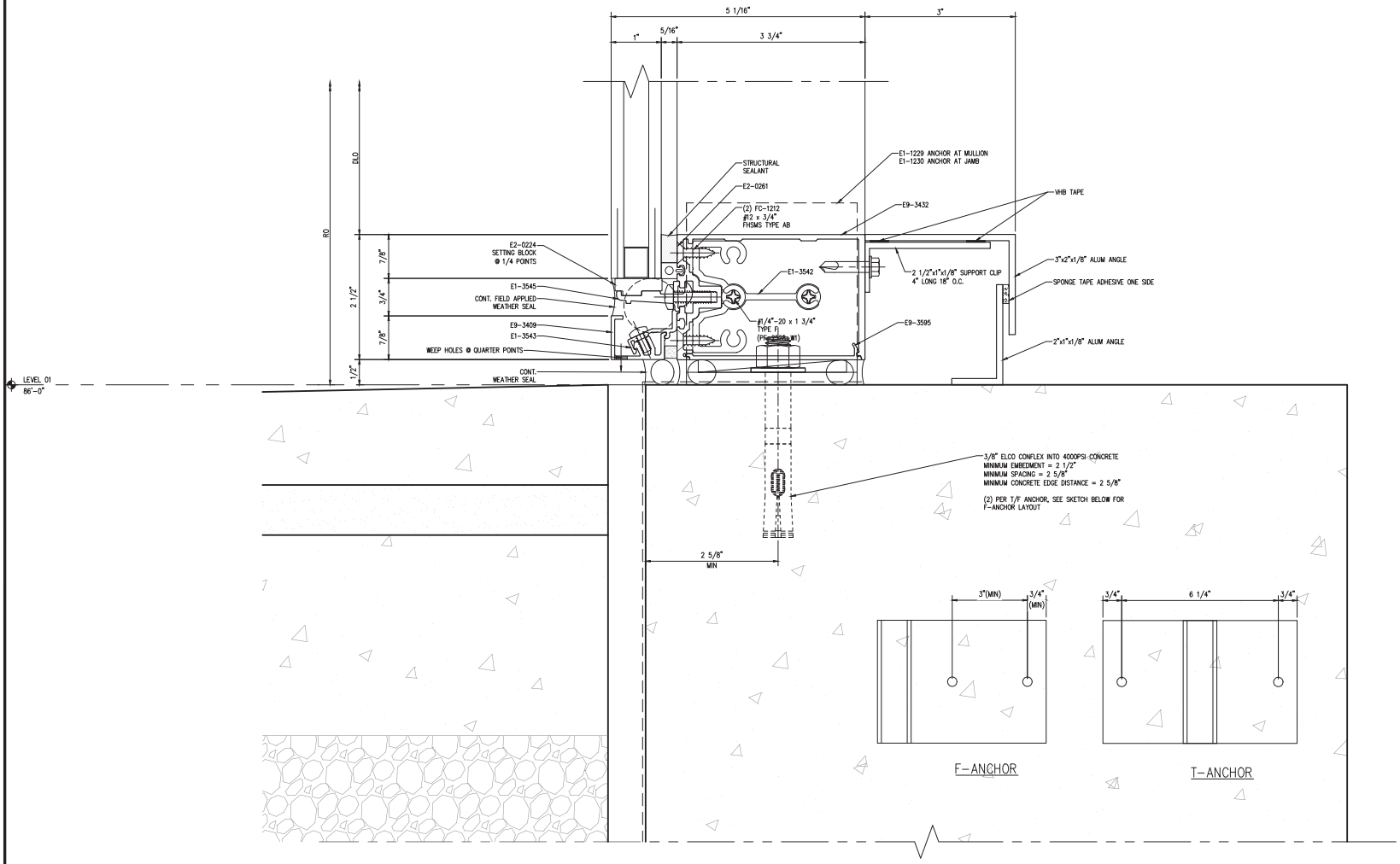

1 SILL DETAIL

Scale: 1:1

NGG LTD

NGG LTD, INCORPORATED
1850 Craigshire Road Suite 202
St. Louis, Missouri 63146

Tel 314-336-2515
Fax 314-336-2521

Professional Seal 02/28/2017

The seal on these plans are not valid with out electronic seal on cover.

Sub. No.	Rev. No.	Date	Drawn By	Submittal/Revision Description
4	3	11/29/16	IY	4TH SUBMISSION
3	2	11/8/16	IY	3RD SUBMISSION
1	-	10/19/16	IY	2ND SUBMISSION

Proprietary Notice

This drawing sheet and contents herein are property of NGG. Use of this drawing, contents or design concepts for purposes other than estimating, drawing preparation and/or manufacturing for NGG shall be cause for legal recourse by NGG.

Project Name
WEBSTER UNIVERSITY
Location
St. Louis, Missouri

Architect
CANNON DESIGN
Location
St. Louis, MO

Contractor
PARIC
Location
St. Louis, Missouri

Owner
WEBSTER UNIVERSITY
Location
St. Louis, Missouri

Drawn Date	Scale
8/10/16	AS NOTED

NGG Project No.

Drawing Title
DETAILS

Drawn By	Sheet No.
IY	360

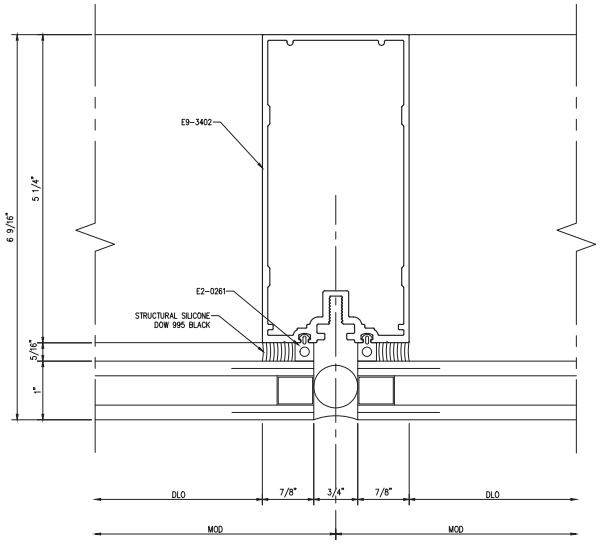

1 SSG MULLION

Scale: 1:1

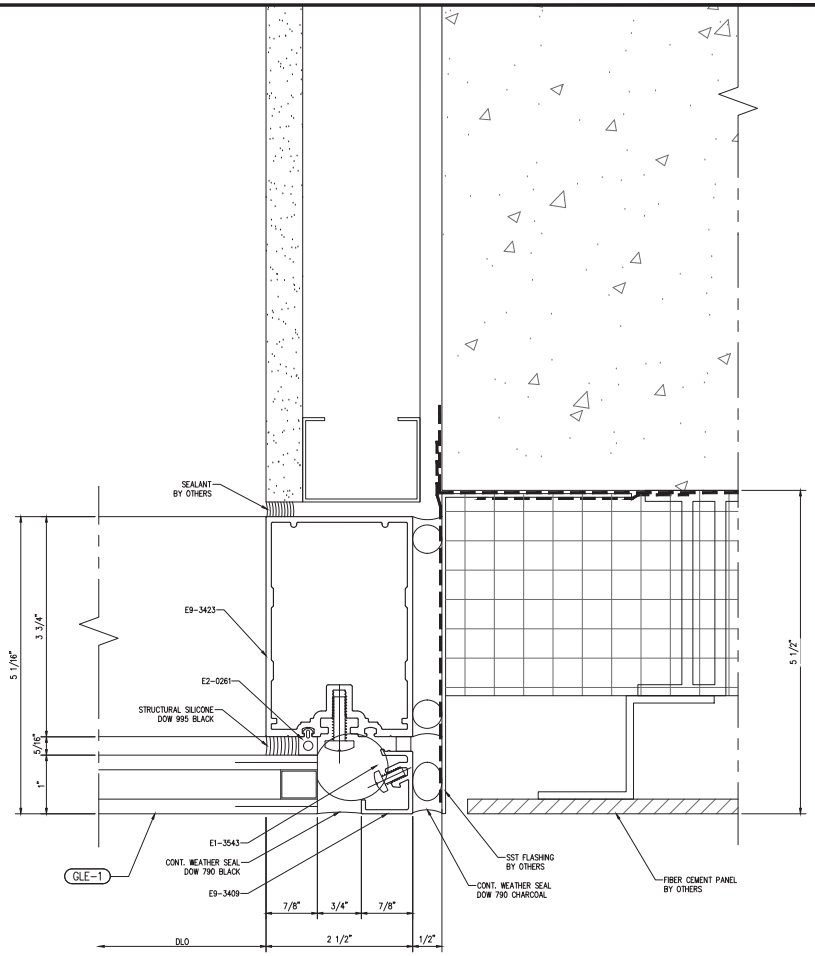

2 JAMB MULLION

REF. 2/A0422

Scale: 1:1

NGG LTD

NGG LTD, INCORPORATED
1550 Craigshire Road Suite 202
St. Louis, Missouri 63146

Tel 314-336-2515
Fax 314-336-2521

Professional Seal 02/28/2017

The seal on these plans are not valid with out electronic seal on cover.

Sub. No.	Rev. No.	Date	Drawn. By	Submittal/Revision Description
4	3	11/29/16	IY	4TH SUBMISSION
3	2	11/8/16	IY	3RD SUBMISSION
2	1	10/19/16	IY	2ND SUBMISSION
1	–	8/10/16	IY	1ST SUBMISSION

Proprietary Notice

This drawing sheet and contents herein are property of NGG. Use of this drawing, contents or design concepts for purposes other than estimating, drawing preparation and/or manufacturing for NGG shall be cause for legal recourse by NGG.

Project Name
WEBSTER UNIVERSITY
Location
St. Louis, Missouri

Architect
CANNON DESIGN
Location
St. Louis, MO

Contractor
PARIC
Location
St. Louis, Missouri

Owner
WEBSTER UNIVERSITY
Location
St. Louis, Missouri

Drawn Date	Scale
8/10/16	AS NOTED

NGG Project No.

Drawing Title
DETAILS

Drawn By	Sheet No.
IY	400

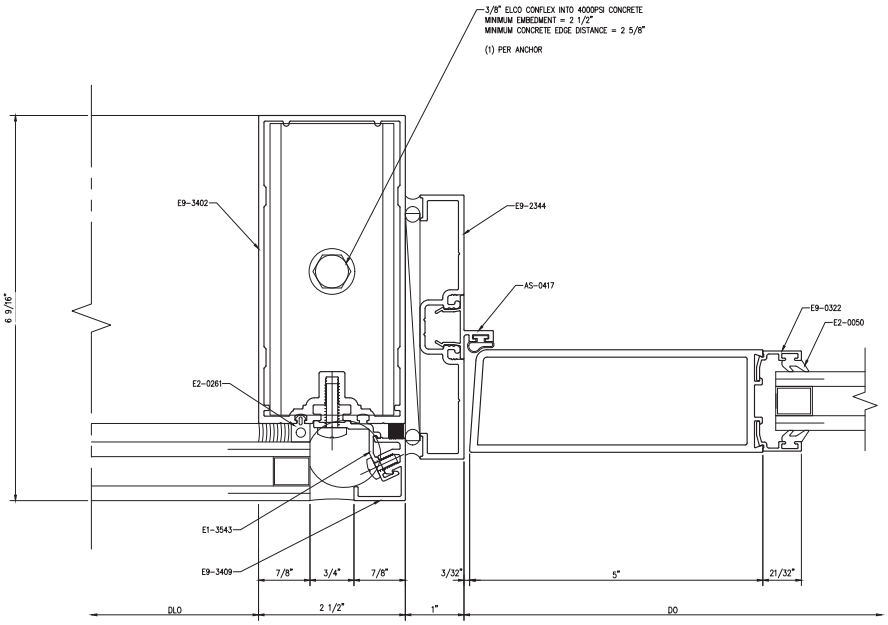

1 DOOR JAMB
Scale: 1:1

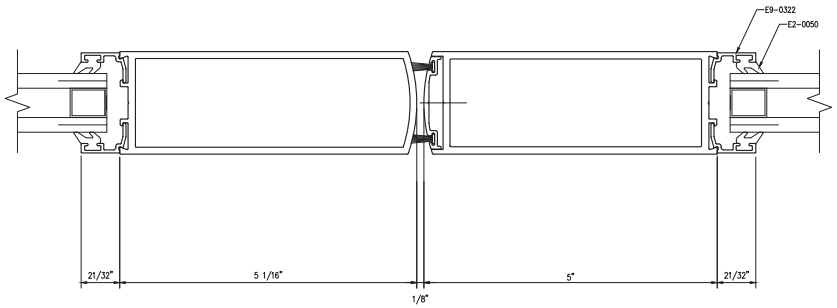

2 DOOR MEETING STILES
Scale: 1:1

NGG LTD

NGG LTD, INCORPORATED
1550 Craigshire Road Suite 202
St. Louis, Missouri 63146

Tel 314-336-2515
Fax 314-336-2521

Professional Seal 02/28/2017

The seal on these plans are not valid with out electronic seal on cover.

Sub. No.	Rev. No.	Date	Drawn By	Submittal/Revision Description
4	3	11/28/16	IY	4TH SUBMISSION
3	2	11/8/16	IY	3RD SUBMISSION
2	1	10/19/16	IY	2ND SUBMISSION
1	–	8/10/16	IY	1ST SUBMISSION

Proprietary Notice

This drawing sheet and contents herein are property of NGG. Use of this drawing, contents or design concepts for purposes other than estimating, drawing preparation and/or manufacturing for NGG shall be cause for legal recourse by NGG.

Project Name
WEBSTER UNIVERSITY
Location
St. Louis, Missouri

Architect
CANNON DESIGN
Location
St. Louis, MO

Contractor
PARIC
Location
St. Louis, Missouri

Owner
WEBSTER UNIVERSITY
Location
St. Louis, Missouri

Drawn Date	Scale
8/10/16	AS NOTED

NGG Project No.

Drawing Title
DETAILS

Drawn By	Sheet No.
IY	401

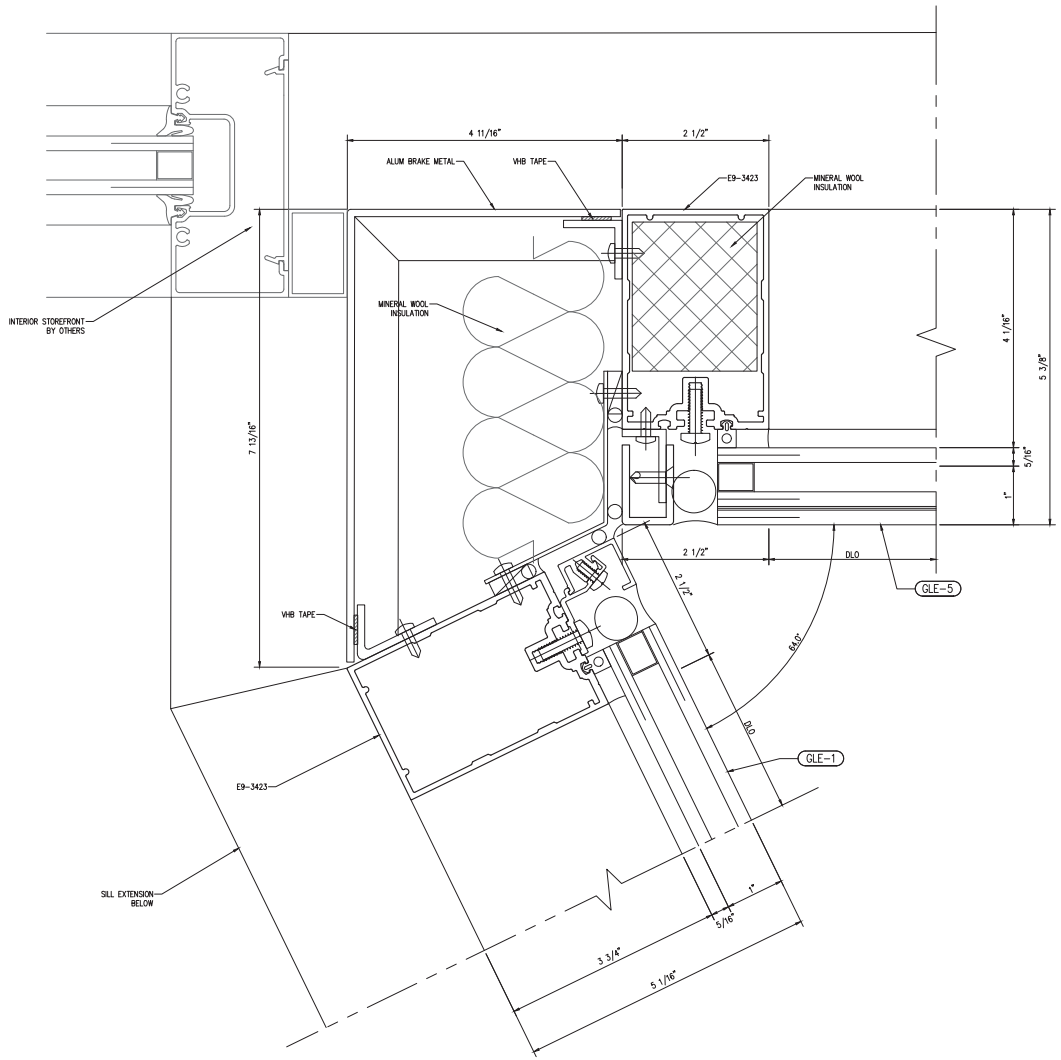

1 CORNER DETAIL
Scale: 1:1

NGG LTD

NGG LTD, INCORPORATED
1550 Craigshire Road Suite 202
St. Louis, Missouri 63146

Tel 314-336-2515
Fax 314-336-2521

Professional Seal 02/28/2017

The seal on these plans are not valid with out electronic seal on cover.

Sub. No.	Rev. No.	Date	Drawn By	Submittal/Revision Description
4	3	11/28/16	IY	4TH SUBMISSION
3	2	11/8/16	IY	3RD SUBMISSION
2	1	10/19/16	IY	2ND SUBMISSION
1	–	8/10/16	IY	1ST SUBMISSION

Proprietary Notice

This drawing sheet and contents herein are property of NGG. Use of this drawing, contents or design concepts for purposes other than estimating, drawing preparation and/or manufacturing for NGG shall be cause for legal recourse by NGG.

Project Name
WEBSTER UNIVERSITY
Location
St. Louis, Missouri

Architect
CANNON DESIGN
Location
St. Louis, MO

Contractor
PARIC
Location
St. Louis, Missouri

Owner
WEBSTER UNIVERSITY
Location
St. Louis, Missouri

Drawn Date	Scale
8/10/16	AS NOTED

NGG Project No.

Drawing Title
DETAILS

Drawn By	Sheet No.
IY	402

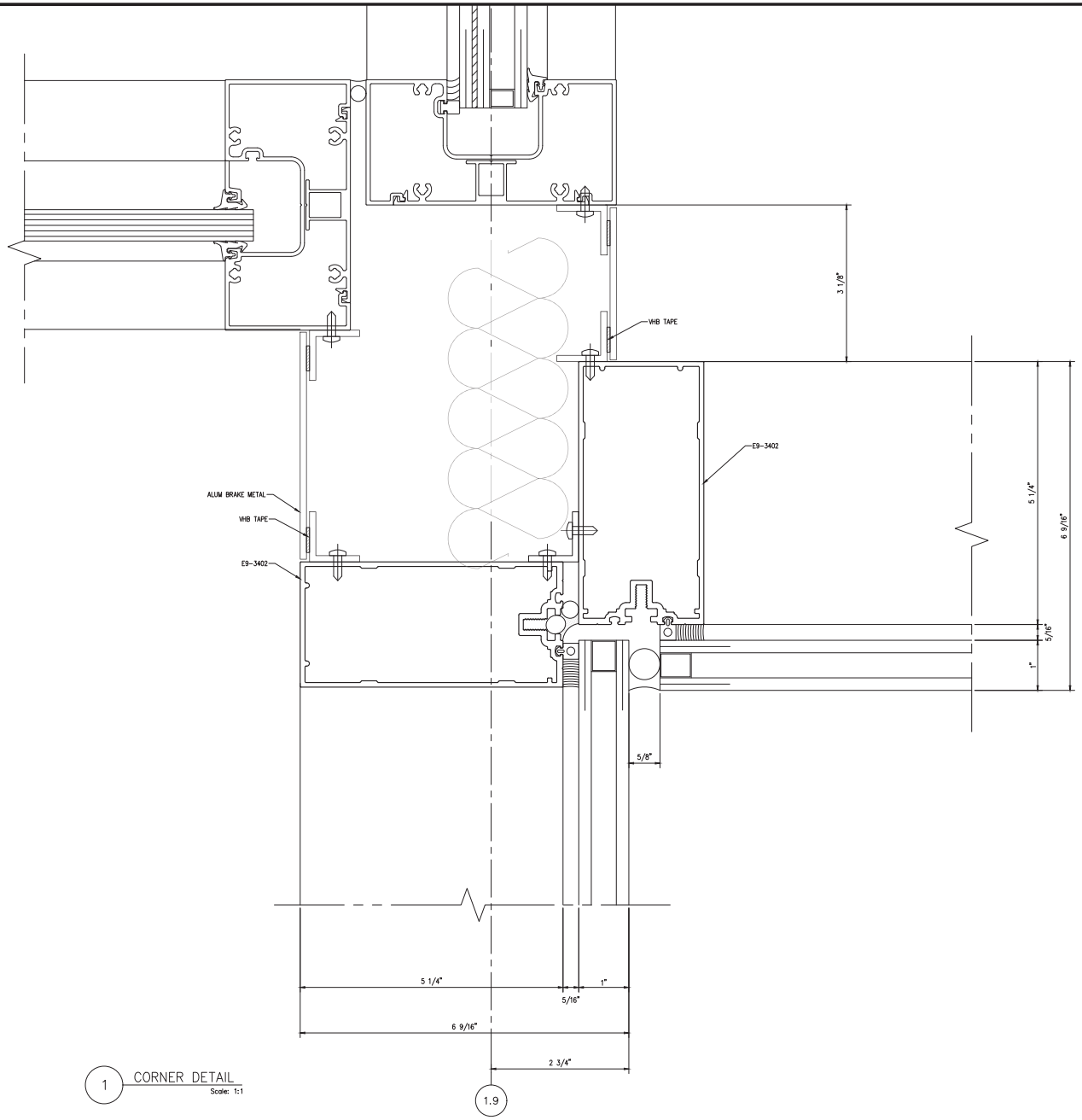

1 CORNER DETAIL
Scale: 1:1

NGG LTD

NGG LTD, INCORPORATED
1550 Craigshire Road Suite 202
St. Louis, Missouri 63146

Tel 314-336-2515
Fax 314-336-2521

Professional Seal 02/28/2017

STATE OF MISSOURI
STEWART P. FOKE
NUMBER
PE-24002
PROFESSIONAL ENGINEER

The seal on these plans are not valid with out electronic seal on cover.

Sub. No.	Rev. No.	Date	Drawn. By	Submittal/Revision Description
4	3	11/28/16	IY	4TH SUBMISSION
3	2	11/8/16	IY	3RD SUBMISSION
2	1	10/19/16	IY	2ND SUBMISSION
1	–	8/10/16	IY	1ST SUBMISSION

Proprietary Notice

This drawing sheet and contents herein are property of NGG. Use of this drawing, contents or design concepts for purposes other than estimating, drawing preparation and/or manufacturing for NGG shall be cause for legal recourse by NGG.

Project Name
WEBSTER UNIVERSITY
Location
St. Louis, Missouri

Architect
CANNON DESIGN
Location
St. Louis, MO

Contractor
PARIC
Location
St. Louis, Missouri

Owner
WEBSTER UNIVERSITY
Location
St. Louis, Missouri

Drawn Date	Scale
8/10/16	AS NOTED

NGG Project No.

Drawing Title
DETAILS

Drawn By	Sheet No.
IY	403

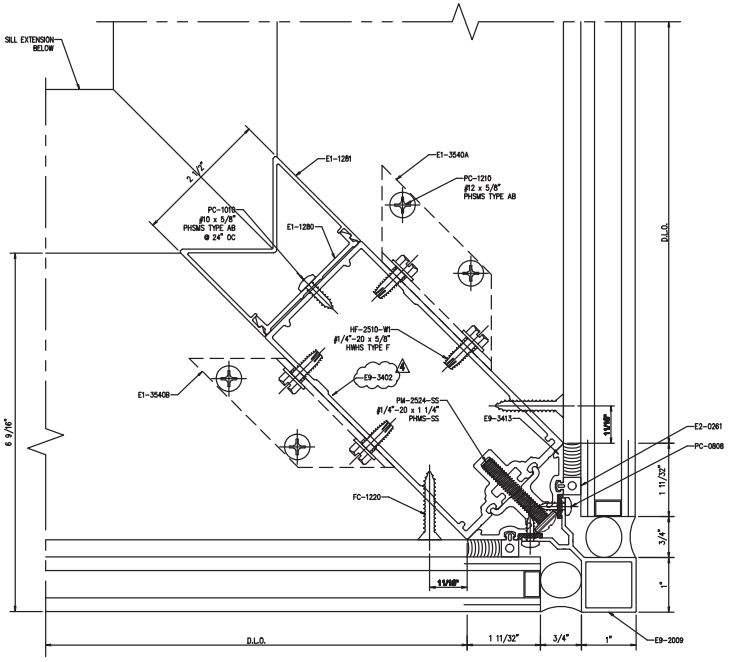

1 CORNER DETAIL
Scale: 1:1

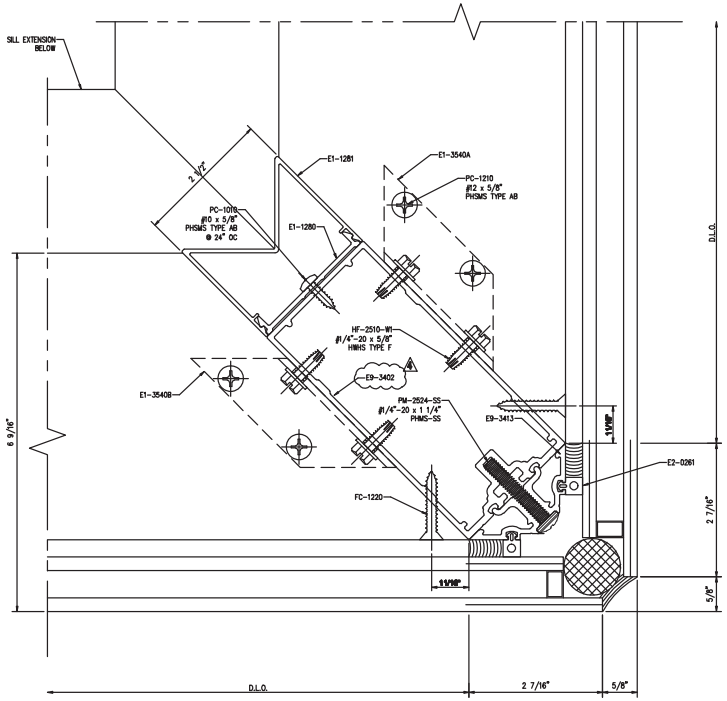

2 CORNER DETAIL
Scale: 1:1

NGG LTD

NGG LTD, INCORPORATED
1850 Craigshire Road Suite 202
St. Louis, Missouri 63146

Tel 314-336-2515
Fax 314-336-2521

Professional Seal 02/28/2017

The seal on these plans are not valid with out electronic seal on cover.

Rev. No.	Date	Drawn By	Submittal/Revision Description
5	02/23/17	RG	5TH SUBMISSION
4	11/29/16	IY	4TH SUBMISSION
3	11/8/16	IY	3RD SUBMISSION
2	10/10/16	IY	2ND SUBMISSION
1	8/10/16	IY	1ST SUBMISSION

Proprietary Notice

This drawing sheet and contents herein are property of NGG. Use of this drawing, contents or design concepts for purposes other than estimating, drawing preparation and/or manufacturing for NGG shall be cause for legal recourse by NGG.

Project Name
WEBSTER UNIVERSITY
Location
St. Louis, Missouri

Architect
CANNON DESIGN
Location
St. Louis, MO

Contractor
PARIC
Location
St. Louis, Missouri

Owner
WEBSTER UNIVERSITY
Location
St. Louis, Missouri

Drawn Date	Scale
8/10/16	AS NOTED

NGG Project No.

Drawing Title
DETAILS

Drawn By	Sheet No.
IY	404

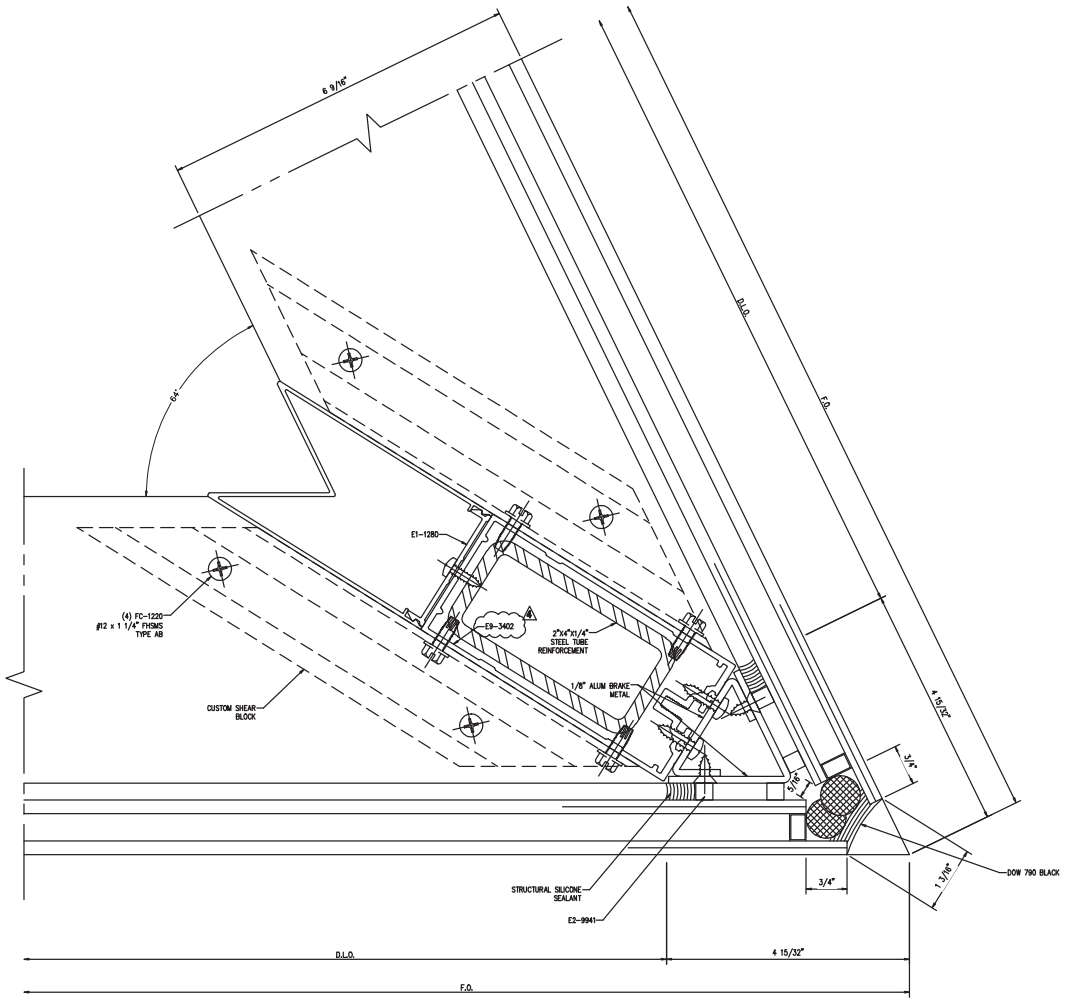

1 CORNER DETAIL
Scale: 1:1

NGG LTD

NGG LTD, INCORPORATED
1850 Craigshire Road Suite 202
St. Louis, Missouri 63146

Tel 314-336-2515
Fax 314-336-2521

Professional Seal 02/28/2017

STEWART P. JESKE
MISSOURI
PE-24062

The seal on these plans are not valid with out electronic seal on cover.

Sub. No.	Rev. No.	Date	Drawn By	Submittal/Revision Description
5	4	02/23/17	RS	5TH SUBMISSION
4	3	11/29/16	IY	4TH SUBMISSION
3	2	11/8/16	IY	3RD SUBMISSION
2	1	10/10/16	IY	2ND SUBMISSION
1	-	8/10/16	IY	1ST SUBMISSION

Proprietary Notice

This drawing sheet and contents herein are property of NGG. Use of this drawing, contents or design concepts for purposes other than estimating, drawing preparation and/or manufacturing for NGG shall be cause for legal recourse by NGG.

Project Name
WEBSTER UNIVERSITY
Location
St. Louis, Missouri

Architect
CANNON DESIGN
Location
St. Louis, MO

Contractor
PARIC
Location
St. Louis, Missouri

Owner
WEBSTER UNIVERSITY
Location
St. Louis, Missouri

Drawn Date	Scale
8/10/16	AS NOTED

NGG Project No.

Drawing Title
DETAILS

Drawn By	Sheet No.
IY	405

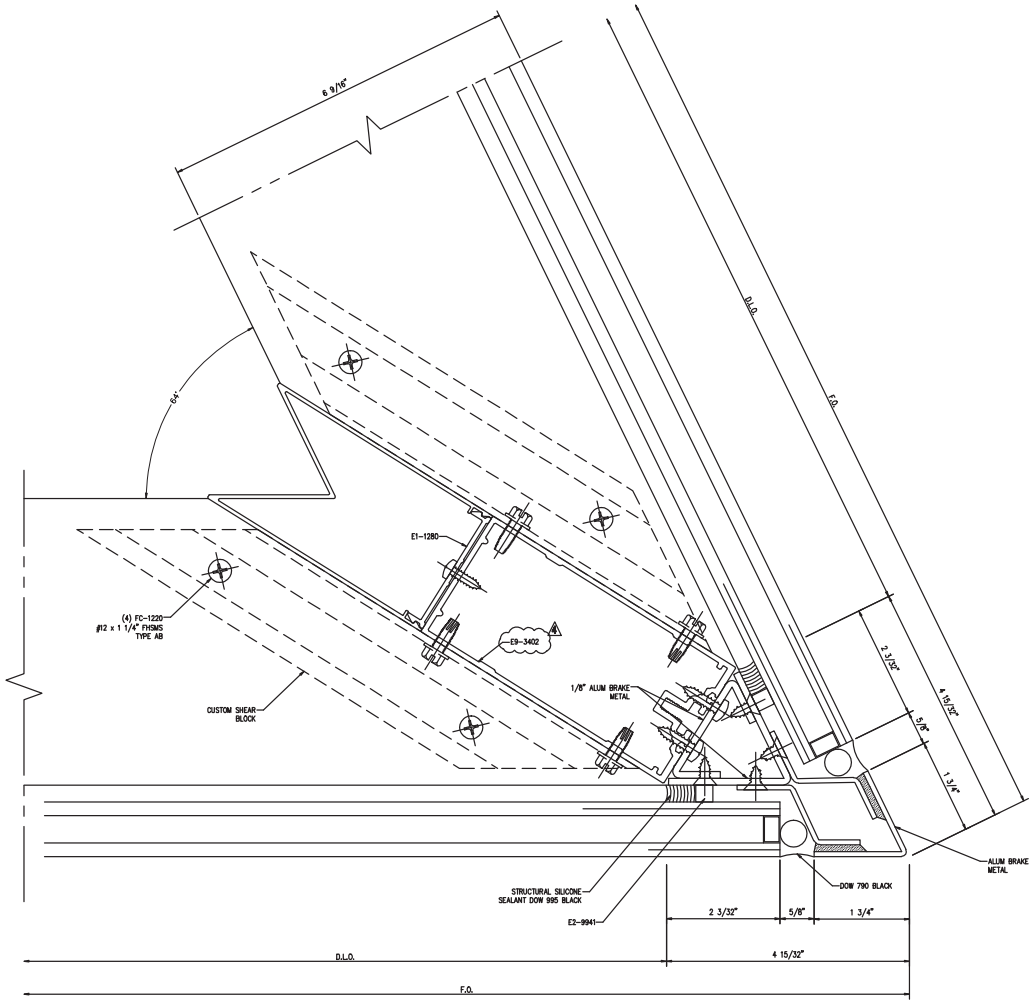

1 CORNER DETAIL
Scale: 1:1

NGG LTD

NGG LTD, INCORPORATED
1850 Craigshire Road Suite 202
St. Louis, Missouri 63146

Tel 314-336-2515
Fax 314-336-2521

Professional Seal 02/28/2017

The seals on these plans are not valid with out electronic seal on cover.

Sub. No.	Rev. No.	Date	Drawn By	Submittal/Revision Description
5	4	02/23/17	RS	5TH SUBMISSION
4	3	11/29/16	IY	4TH SUBMISSION
3	2	11/8/16	IY	3RD SUBMISSION
2	1	10/10/16	IY	2ND SUBMISSION
1	-	8/10/16	IY	1ST SUBMISSION

Proprietary Notice

This drawing sheet and contents herein are property of NGG. Use of this drawing, contents or design concepts for purposes other than estimating, drawing preparation and/or manufacturing for NGG shall be cause for legal recourse by NGG.

Project Name
WEBSTER UNIVERSITY
Location
St. Louis, Missouri

Architect
CANNON DESIGN
Location
St. Louis, MO

Contractor
PARIC
Location
St. Louis, Missouri

Owner
WEBSTER UNIVERSITY
Location
St. Louis, Missouri

Drawn Date	Scale
8/10/16	AS NOTED

NGG Project No.

Drawing Title
DETAILS

Drawn By	Sheet No.
IY	406

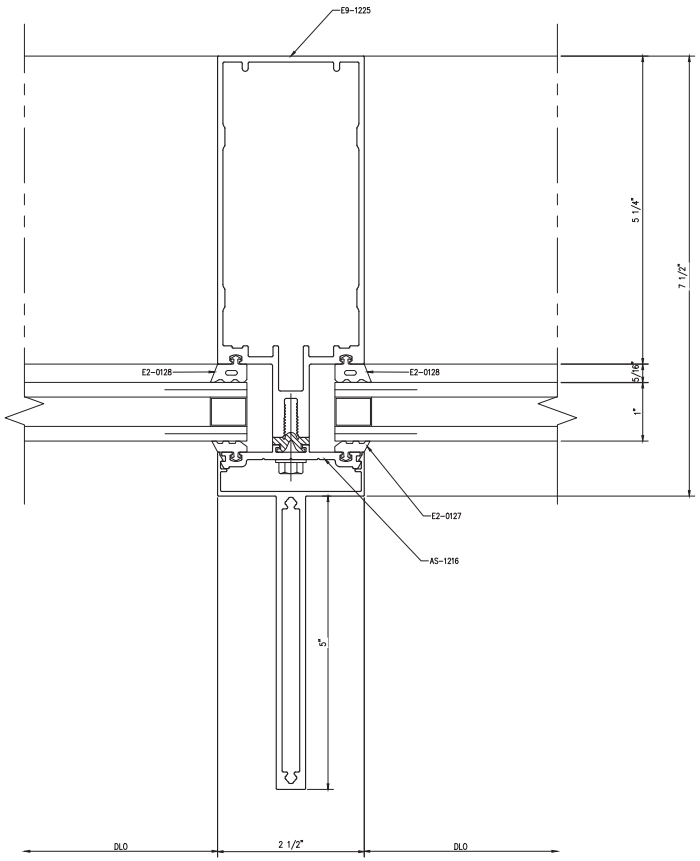

1 TYP. MULLION
Scale: 1:1

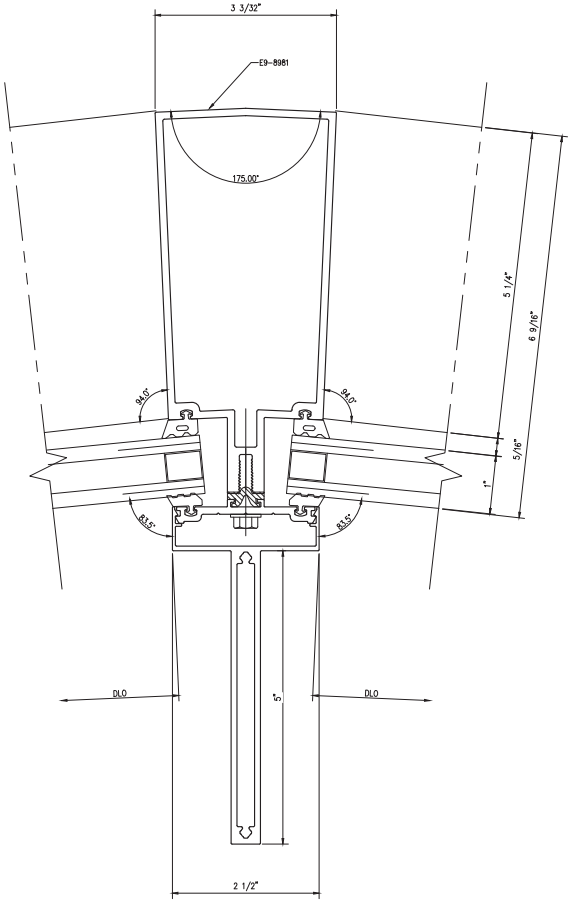

2 TAPERED MULLION
Scale: 1:1

NGG LTD

NGG LTD, INCORPORATED
1550 Craigshire Road Suite 202
St. Louis, Missouri 63146

Tel 314-336-2515
Fax 314-336-2521

Professional Seal 02/28/2017

STATE OF MISSOURI
STEWART P. FOKE
NUMBER PE-24002
PROFESSIONAL ENGINEER

The seal on these plans are not valid with out electronic seal on cover.

Sub. No.	Rev. No.	Date	Drawn By	Submittal/Revision Description
4	3	11/28/16	IY	4TH SUBMISSION
3	2	11/8/16	IY	3RD SUBMISSION
2	1	10/19/16	IY	2ND SUBMISSION
1	-	8/10/16	IY	1ST SUBMISSION

Proprietary Notice

This drawing sheet and contents herein are property of NGG. Use of this drawing, contents or design concepts for purposes other than estimating, drawing preparation and/or manufacturing for NGG shall be cause for legal recourse by NGG.

Project Name
WEBSTER UNIVERSITY
Location
St. Louis, Missouri

Architect
CANNON DESIGN
Location
St. Louis, MO

Contractor
PARIC
Location
St. Louis, Missouri

Owner
WEBSTER UNIVERSITY
Location
St. Louis, Missouri

Drawn Date	Scale
8/10/16	AS NOTED

NGG Project No.

Drawing Title
DETAILS

Drawn By	Sheet No.
IY	407

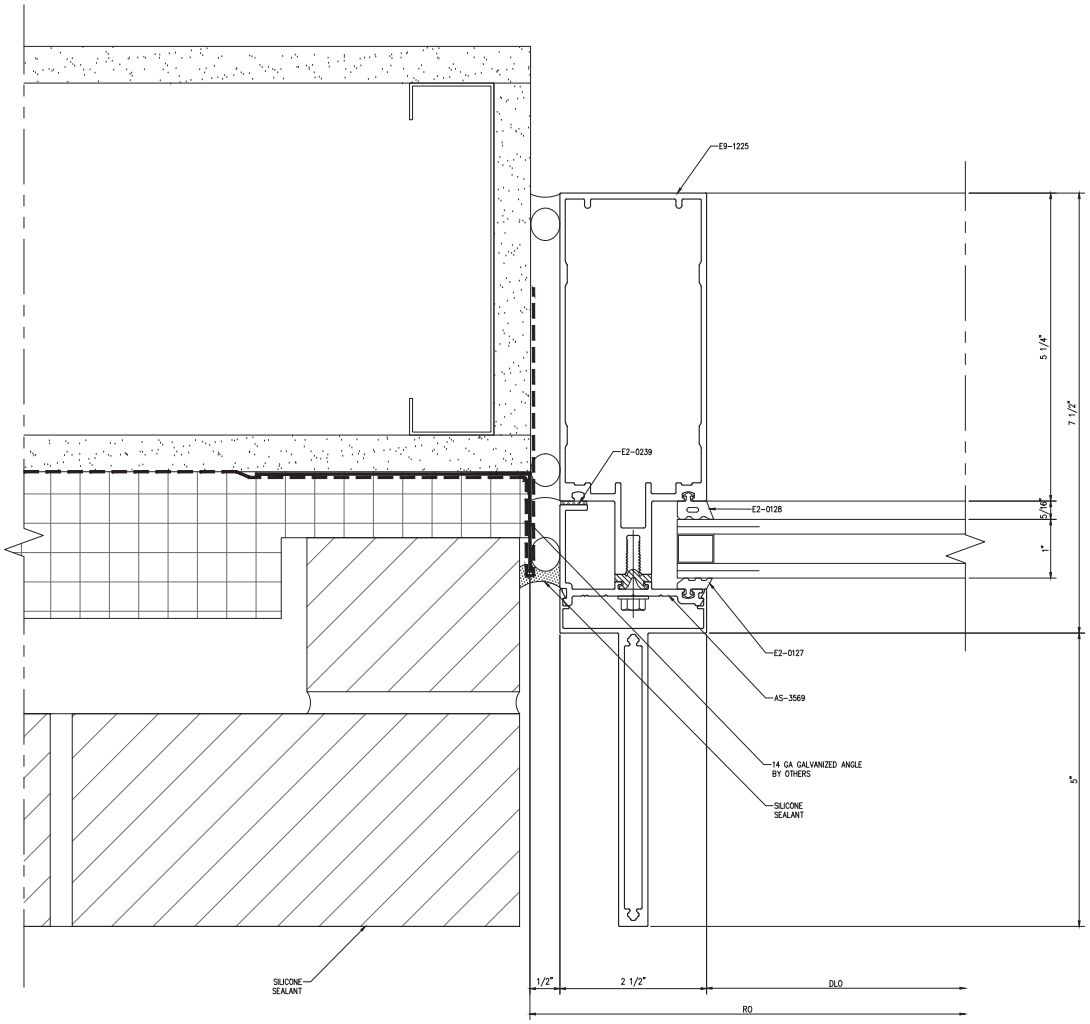

1 JAMB MULLION

REF. 1/A0421, 7/A0422 Scale: 1:1

NGG LTD

NGG LTD, INCORPORATED
1550 Craigshire Road Suite 202
St. Louis, Missouri 63146

Tel 314-336-2515
Fax 314-336-2521

Professional Seal 02/28/2017

STATE OF MISSOURI
STEWART P. ROSE
PE-24002
PROFESSIONAL ENGINEER

The seal on these plans are not valid with out electronic seal on cover.

Sub. No.	Rev. No.	Date	Drawn By	Submittal/Revision Description
4	3	11/29/16	IY	4TH SUBMISSION
3	2	11/8/16	IY	3RD SUBMISSION
2	1	10/19/16	IY	2ND SUBMISSION
1	–	8/10/16	IY	1ST SUBMISSION

Proprietary Notice

This drawing sheet and contents herein are property of NGG. Use of this drawing, contents or design concepts for purposes other than estimating, drawing preparation and/or manufacturing for NGG shall be cause for legal recourse by NGG.

Project Name
WEBSTER UNIVERSITY
Location
St. Louis, Missouri

Architect
CANNON DESIGN
Location
St. Louis, MO

Contractor
PARIC
Location
St. Louis, Missouri

Owner
WEBSTER UNIVERSITY
Location
St. Louis, Missouri

Drawn Date	Scale
8/10/16	AS NOTED

NGG Project No.

Drawing Title
DETAILS

Drawn By	Sheet No.
IY	408

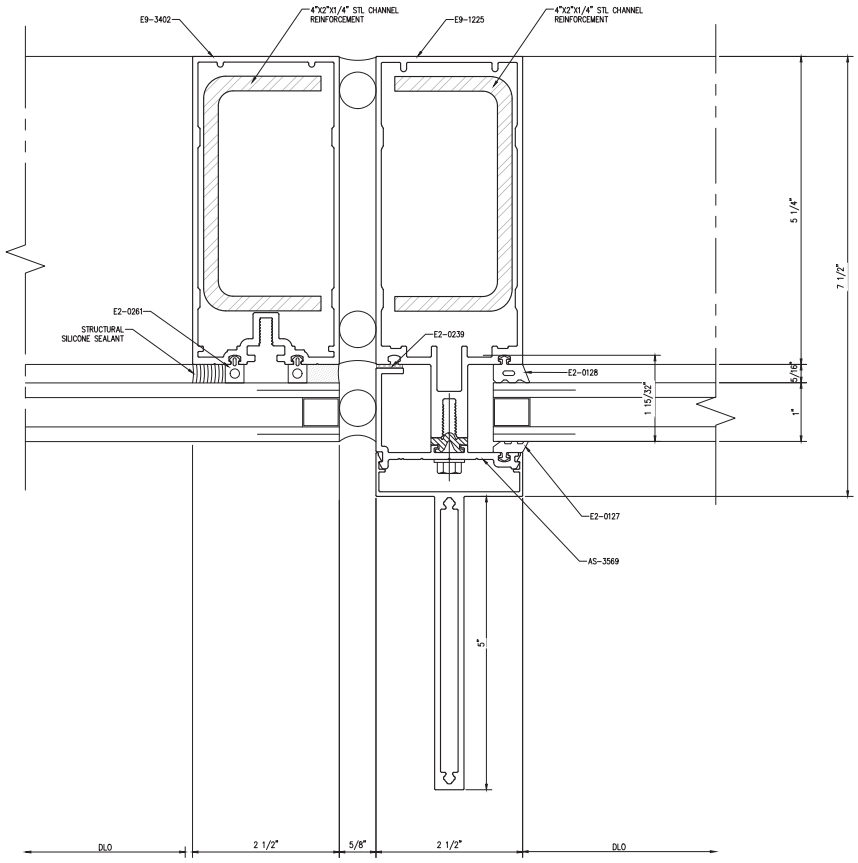

1 MULLION DETAIL
REF. 9/A0455
Scale: 1:1

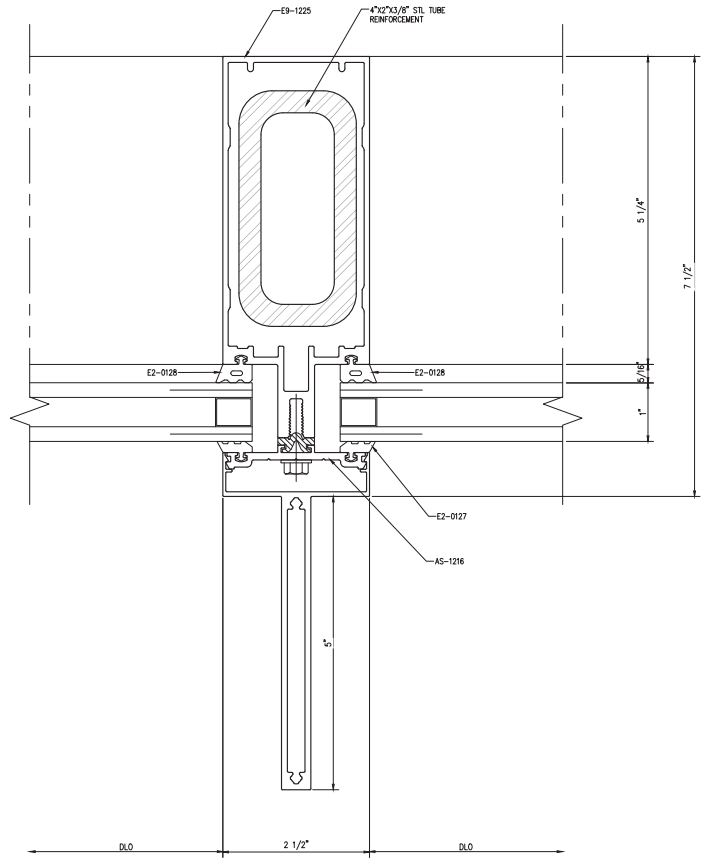

2 TYP. MULLION W/ STEEL
Scale: 1:1

NGG LTD

NGG LTD, INCORPORATED
1550 Craigshire Road Suite 202
St. Louis, Missouri 63146

Tel 314-336-2515
Fax 314-336-2521

Professional Seal 02/28/2017

The seal on these plans are not valid with out electronic seal on cover.

Sub. No.	Rev. No.	Date	Drawn. By	Submittal/Revision Description
4	3	11/29/16	IY	4TH SUBMISSION
3	2	11/8/16	IY	3RD SUBMISSION
2	1	10/19/16	IY	2ND SUBMISSION
1	-	8/10/16	IY	1ST SUBMISSION

Proprietary Notice

This drawing sheet and contents herein are property of NGG. Use of this drawing, contents or design concepts for purposes other than estimating, drawing preparation and/or manufacturing for NGG shall be cause for legal recourse by NGG.

Project Name
WEBSTER UNIVERSITY
Location
St. Louis, Missouri

Architect
CANNON DESIGN
Location
St. Louis, MO

Contractor
PARIC
Location
St. Louis, Missouri

Owner
WEBSTER UNIVERSITY
Location
St. Louis, Missouri

Drawn Date	Scale
8/10/16	AS NOTED

NGG Project No.

Drawing Title
DETAILS

Drawn By	Sheet No.
IY	409

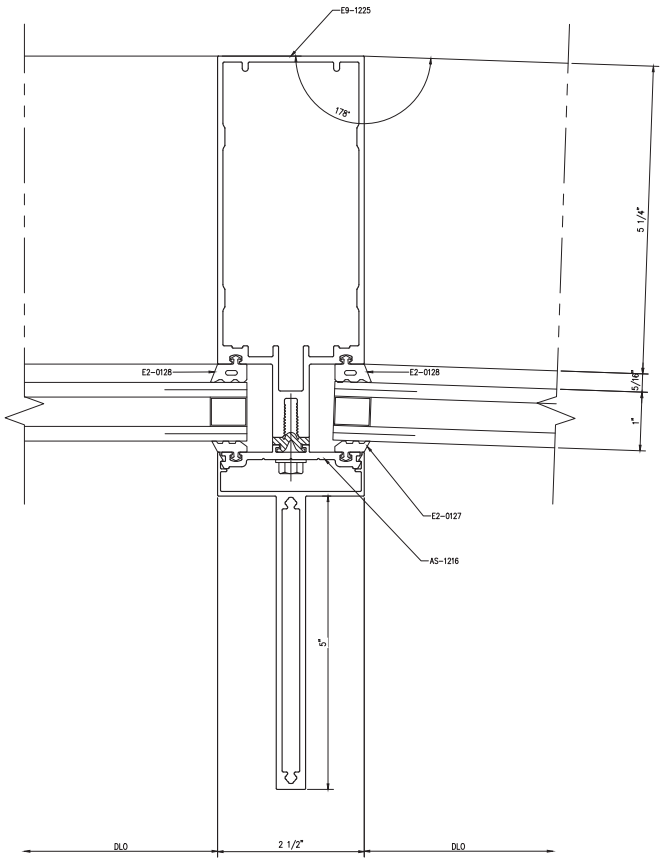

1 TYP. MULLION
Scale: 1:1

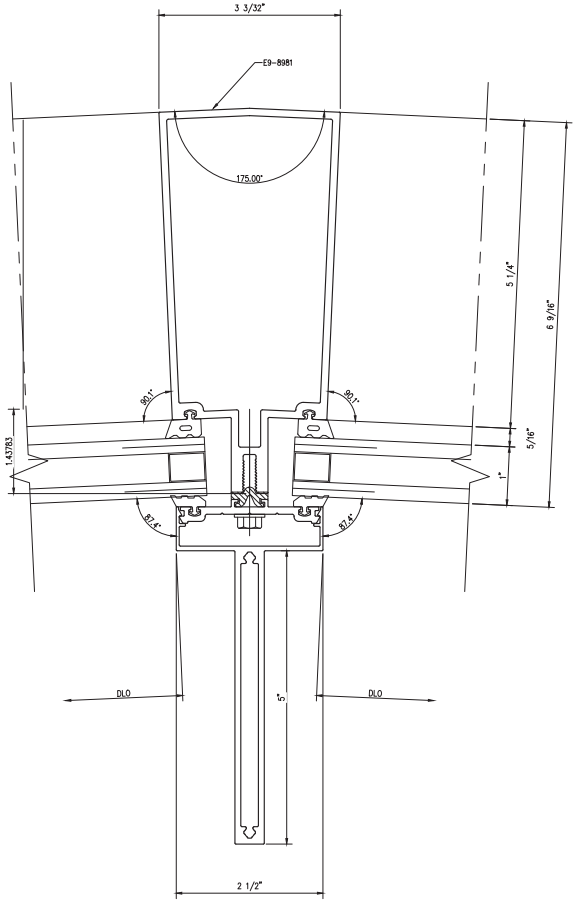

2 TAPERED MULLION
Scale: 1:1

NGG LTD

NGG LTD, INCORPORATED
1550 Craigshire Road Suite 202
St. Louis, Missouri 63146

Tel 314-336-2515
Fax 314-336-2521

Professional Seal 02/28/2017

STATE OF MISSOURI
STEWART P. FISKE
NUMBER PE-24002
PROFESSIONAL ENGINEER

The seal on these plans are not valid with out electronic seal on cover.

Sub. No.	Rev. No.	Date	Drawn. By	Submittal/Revision Description
4	3	11/28/16	IY	4TH SUBMISSION
3	2	11/8/16	IY	3RD SUBMISSION
2	1	10/19/16	IY	2ND SUBMISSION
1	–	8/10/16	IY	1ST SUBMISSION

Proprietary Notice

This drawing sheet and contents herein are property of NGG. Use of this drawing, contents or design concepts for purposes other than estimating, drawing preparation and/or manufacturing for NGG shall be cause for legal recourse by NGG.

Project Name
WEBSTER UNIVERSITY
Location
St. Louis, Missouri

Architect
CANNON DESIGN
Location
St. Louis, MO

Contractor
PARIC
Location
St. Louis, Missouri

Owner
WEBSTER UNIVERSITY
Location
St. Louis, Missouri

Drawn Date	Scale
8/10/16	AS NOTED

NGG Project No.

Drawing Title
DETAILS

Drawn By	Sheet No.
IY	410

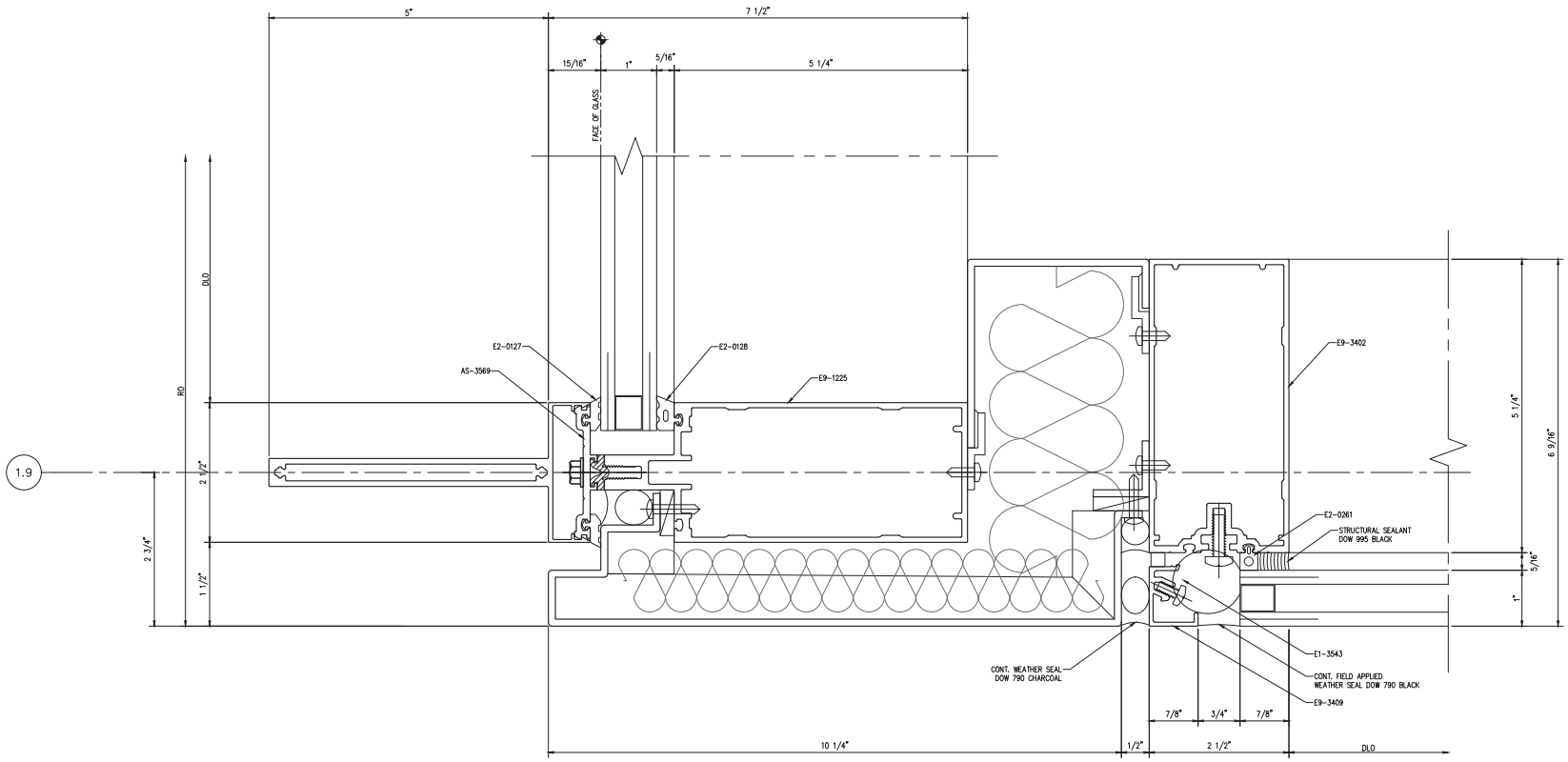

1 CORNER DETAIL

Scale: 1:1

NGG LTD

NGG LTD, INCORPORATED
1550 Craigshire Road Suite 202
St. Louis, Missouri 63146

Tel 314-336-2515
Fax 314-336-2521

Professional Seal 02/28/2017

STATE OF MISSOURI
STEWART P. FISKE
NUMBER
PE-24002
PROFESSIONAL ENGINEER

The seal on these plans are not valid with out electronic seal on cover.

Sub. No.	Rev. No.	Date	Drawn By	Submittal/Revision Description
4	3	11/29/16	IY	4TH SUBMISSION
3	2	11/8/16	IY	3RD SUBMISSION
2	1	10/19/16	IY	2ND SUBMISSION
1	–	8/10/16	IY	1ST SUBMISSION

Proprietary Notice

This drawing sheet and contents herein are property of NGG. Use of this drawing, contents or design concepts for purposes other than estimating, drawing preparation and/or manufacturing for NGG shall be cause for legal recourse by NGG.

Project Name
WEBSTER UNIVERSITY
Location
St. Louis, Missouri

Architect
CANNON DESIGN
Location
St. Louis, MO

Contractor
PARIC
Location
St. Louis, Missouri

Owner
WEBSTER UNIVERSITY
Location
St. Louis, Missouri

Drawn Date	Scale
8/10/16	AS NOTED

NGG Project No.

Drawing Title
DETAILS

Drawn By	Sheet No.
IY	411

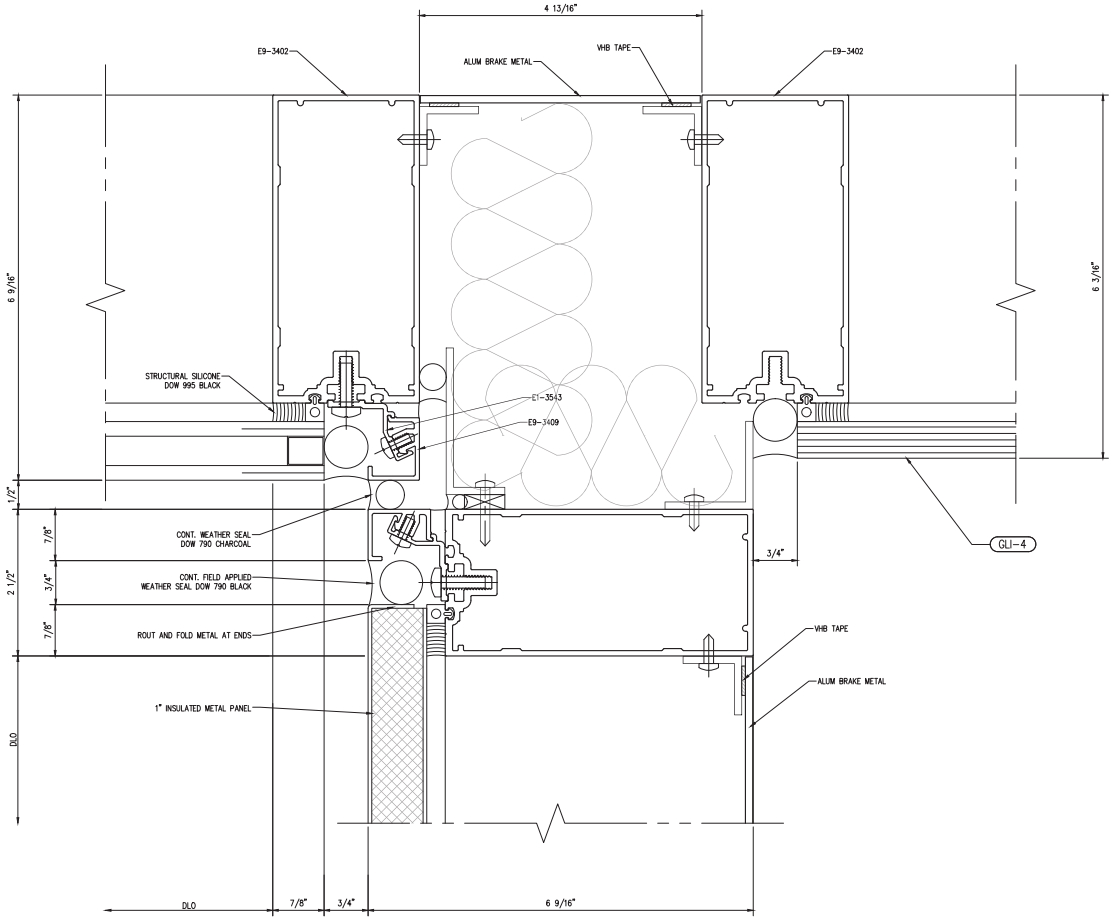

1 CORNER DETAIL
Scale: 1:1

NGG LTD

NGG LTD, INCORPORATED
1550 Craigshire Road Suite 202
St. Louis, Missouri 63146

Tel 314-336-2515
Fax 314-336-2521

Professional Seal 02/28/2017

STATE OF MISSOURI
STEWART P. FOKE
PE-24002
PROFESSIONAL ENGINEER

The seal on these plans are not valid with out electronic seal on cover.

Sub. No.	Rev. No.	Date	Drawn By	Submittal/Revision Description
4	3	11/28/16	IY	4TH SUBMISSION
3	2	11/8/16	IY	3RD SUBMISSION
2	1	10/19/16	IY	2ND SUBMISSION
1	–	8/10/16	IY	1ST SUBMISSION

Proprietary Notice

This drawing sheet and contents herein are property of NGG. Use of this drawing, contents or design concepts for purposes other than estimating, drawing preparation and/or manufacturing for NGG shall be cause for legal recourse by NGG.

Project Name
WEBSTER UNIVERSITY
Location
St. Louis, Missouri

Architect
CANNON DESIGN
Location
St. Louis, MO

Contractor
PARIC
Location
St. Louis, Missouri

Owner
WEBSTER UNIVERSITY
Location
St. Louis, Missouri

Drawn Date	Scale
8/10/16	AS NOTED

NGG Project No.

Drawing Title
DETAILS

Drawn By	Sheet No.
IY	412

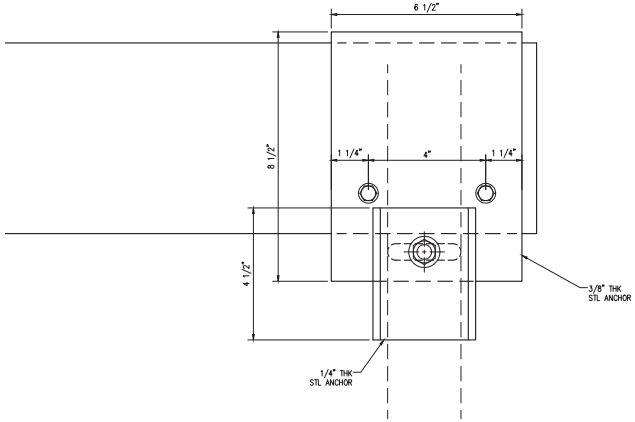

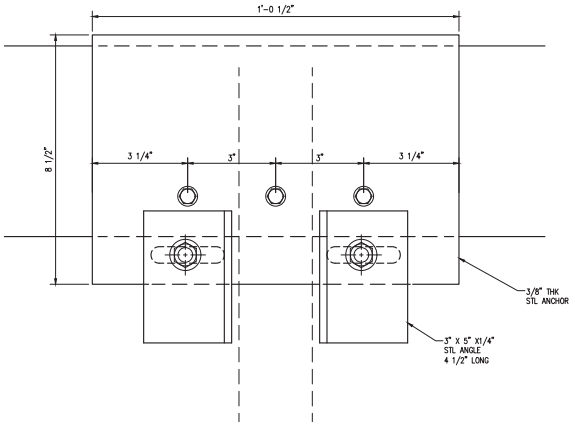

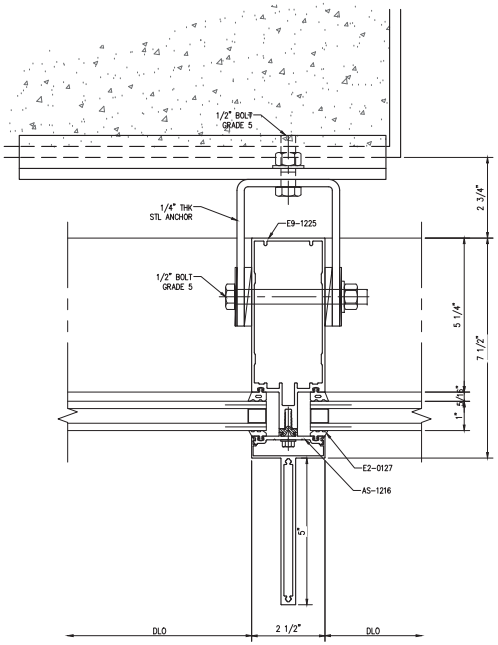

1 WIND LOAD ANCHOR AT LEVEL 4

Scale: 1:1

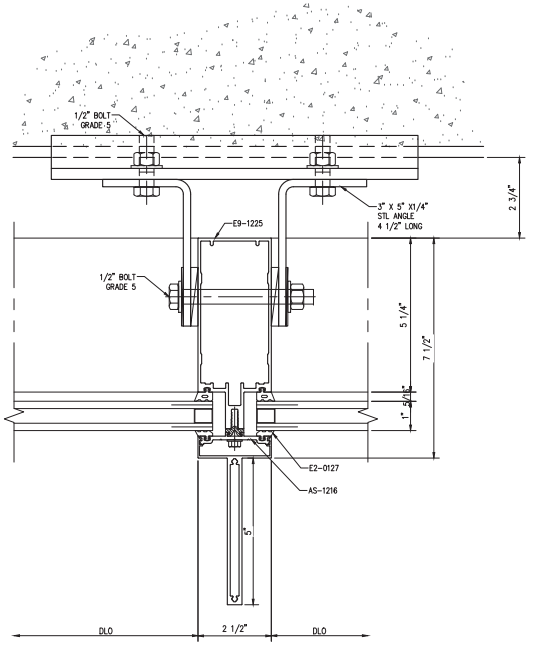

2 WIND LOAD ANCHOR

Scale: 1:1

NGG LTD

NGG LTD, INCORPORATED
1850 Craigshire Road Suite 202
St. Louis, Missouri 63146

Tel 314-336-2515
Fax 314-336-2521

Professional Seal 02/28/2017

STATE OF MISSOURI
STEWART P. ROSE
PE-24002
PROFESSIONAL ENGINEER

The seal on these plans are not valid with out electronic seal on cover.

Sub. No.	Rev. No.	Date	Drawn By	Submittal/Revision Description
4	3	11/28/16	IY	3RD SUBMISSION
3	2	11/8/16	IY	2ND SUBMISSION
2	1	10/19/16	IY	1ST SUBMISSION
1	-	8/10/16	IY	

Proprietary Notice

This drawing sheet and contents herein are property of NGG. Use of this drawing, contents or design concepts for purposes other than estimating, drawing preparation and/or manufacturing for NGG shall be cause for legal recourse by NGG.

Project Name
WEBSTER UNIVERSITY
Location
St. Louis, Missouri

Architect
CANNON DESIGN
Location
St. Louis, MO

Contractor
PARIC
Location
St. Louis, Missouri

Owner
WEBSTER UNIVERSITY
Location
St. Louis, Missouri

Drawn Date	Scale
8/10/16	AS NOTED

NGG Project No.

Drawing Title
DETAILS

Drawn By	Sheet No.
IY	413

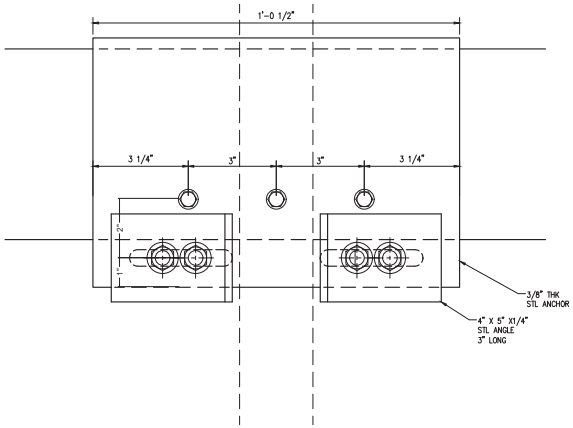

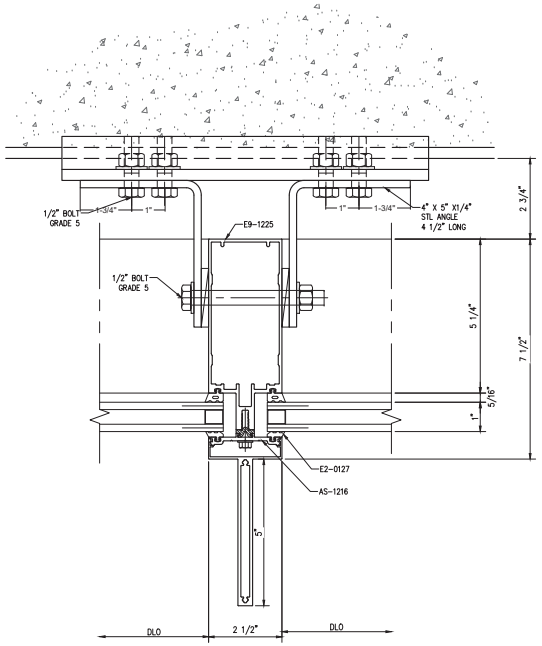

1 DEAD LOAD ANCHOR

Scale: 1:1

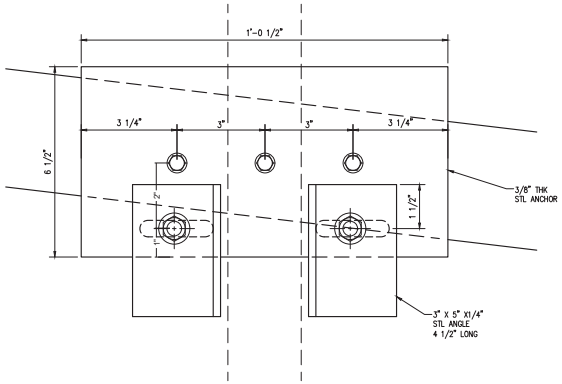

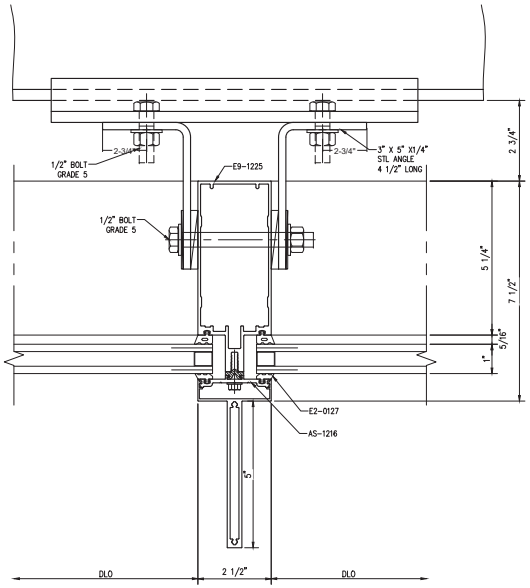

2 WIND LOAD ANCHOR AT ROOF

Scale: 1:1

NGG LTD

NGG LTD, INCORPORATED
1550 Craigshire Road Suite 202
St. Louis, Missouri 63146

Tel 314-336-2515
Fax 314-336-2521

Professional Seal 02/28/2017

STATE OF MISSOURI
STEWART P. FISKE
PE-24002
PROFESSIONAL ENGINEER

The seal on these plans are not valid with out electronic seal on cover.

Sub. No.	Rev. No.	Date	Drawn By	Submittal/Revision Description
4	3	11/28/16	IY	3RD SUBMISSION
3	2	11/8/16	IY	2ND SUBMISSION
2	1	10/19/16	IY	1ST SUBMISSION
1	–	8/10/16	IY	

Proprietary Notice

This drawing sheet and contents herein are property of NGG. Use of this drawing, contents or design concepts for purposes other than estimating, drawing preparation and/or manufacturing for NGG shall be cause for legal recourse by NGG.

Project Name
WEBSTER UNIVERSITY
Location
St. Louis, Missouri

Architect
CANNON DESIGN
Location
St. Louis, MO

Contractor
PARIC
Location
St. Louis, Missouri

Owner
WEBSTER UNIVERSITY
Location
St. Louis, Missouri

Drawn Date	Scale
8/10/16	AS NOTED

NGG Project No.

Drawing Title
DETAILS

Drawn By	Sheet No.
IY	414

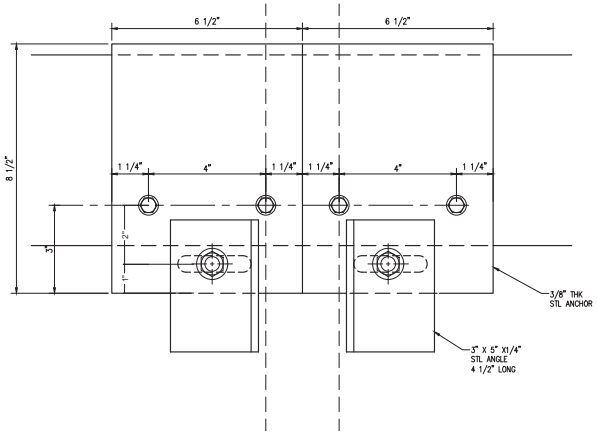

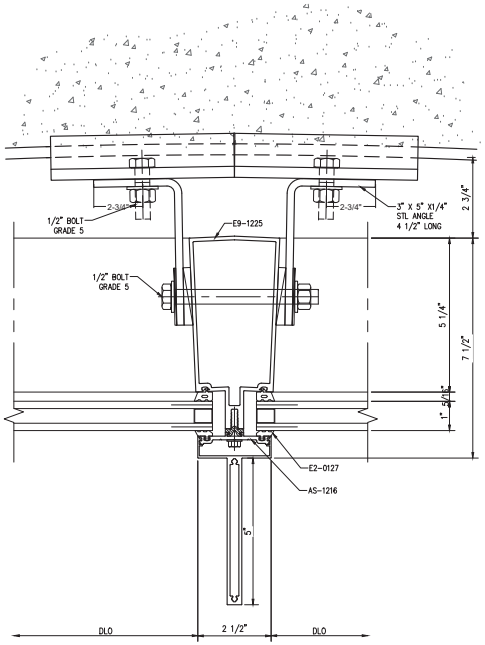

1 WIND LOAD FLOOR ANCHOR

Scale: 1:1

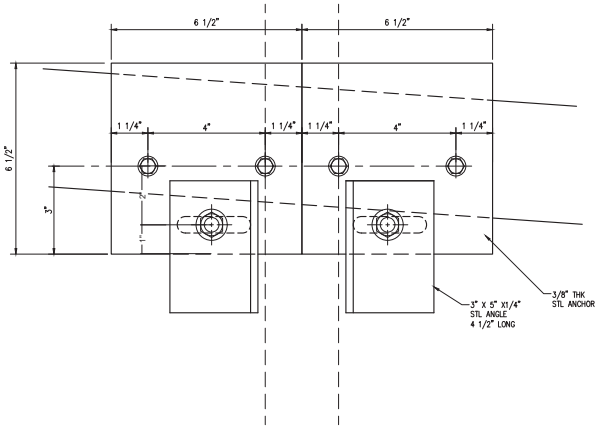

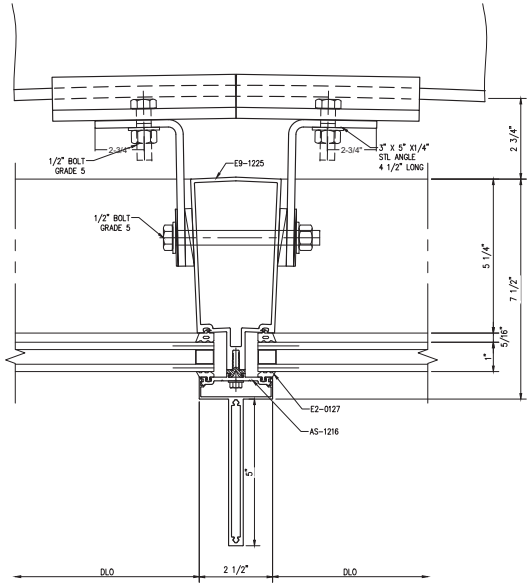

2 WIND LOAD ANCHOR AT ROOF

Scale: 1:1

NGG LTD

NGG LTD, INCORPORATED
1550 Craigshire Road Suite 202
St. Louis, Missouri 63146

Tel 314-336-2515
Fax 314-336-2521

Professional Seal 02/28/2017

STATE OF MISSOURI
STEWART P. FOKE
NUMBER
PE-24002
PROFESSIONAL ENGINEER

The seal on these plans are not valid with out electronic seal on cover.

Sub. No.	Rev. No.	Date	Drawn. By	Submittal/Revision Description
4	3	11/28/16	IY	3RD SUBMISSION
3	2	11/8/16	IY	2ND SUBMISSION
2	1	10/19/16	IY	1ST SUBMISSION
1	–	8/10/16	IY	

Proprietary Notice

This drawing sheet and contents herein are property of NGG. Use of this drawing, contents or design concepts for purposes other than estimating, drawing preparation and/or manufacturing for NGG shall be cause for legal recourse by NGG.

Project Name
WEBSTER UNIVERSITY
Location
St. Louis, Missouri

Architect
CANNON DESIGN
Location
St. Louis, MO

Contractor
PARIC
Location
St. Louis, Missouri

Owner
WEBSTER UNIVERSITY
Location
St. Louis, Missouri

Drawn Date	Scale
8/10/16	AS NOTED

NGG Project No.

Drawing Title
DETAILS

Drawn By	Sheet No.
IY	415

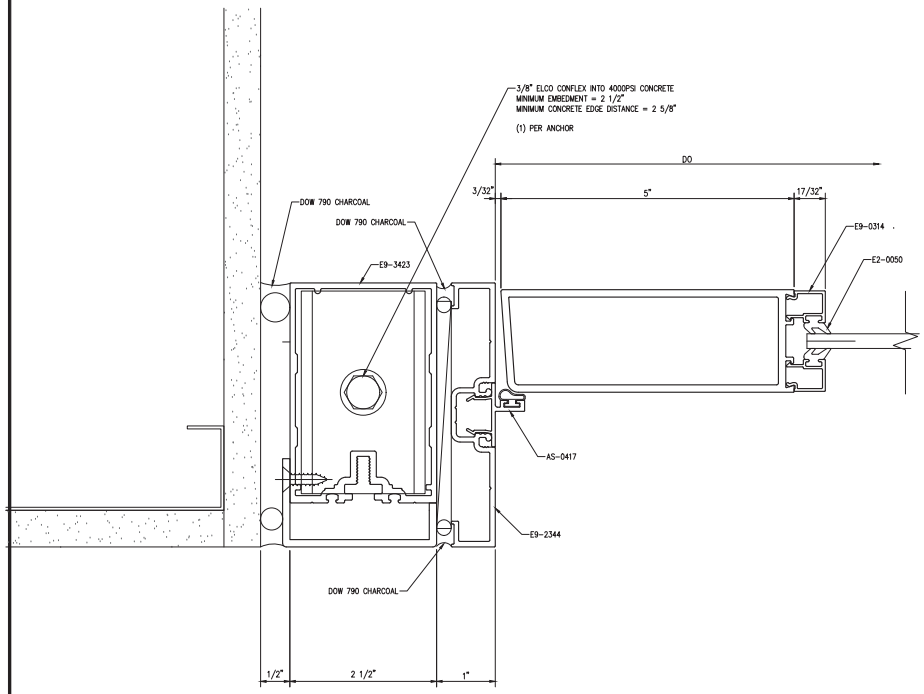

1 DOOR JAMB

Scale: 1:1

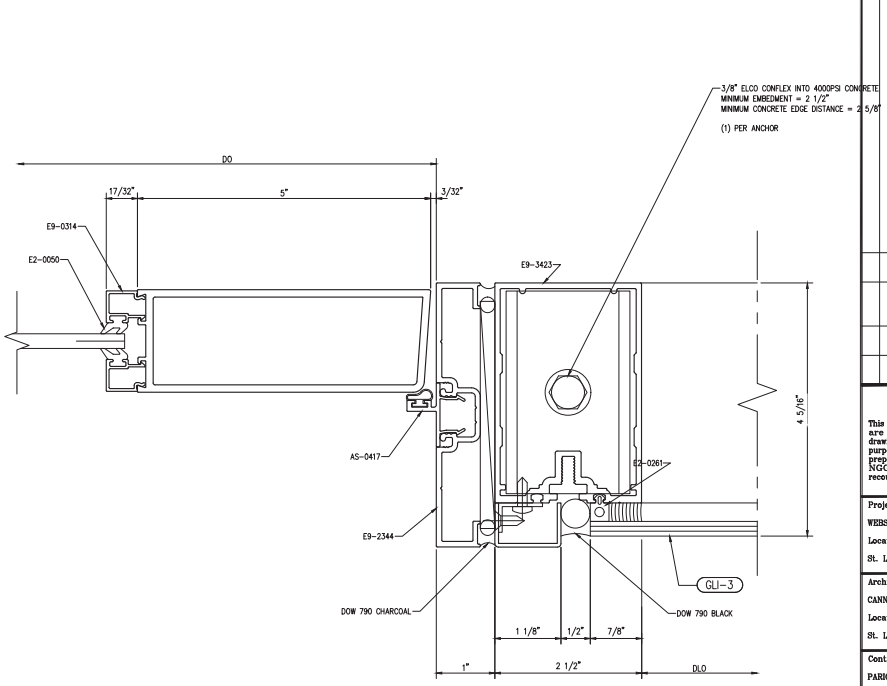

2 DOOR JAMB

Scale: 1:1

NGG LTD

NGG LTD, INCORPORATED
1550 Craigshire Road Suite 202
St. Louis, Missouri 63146

Tel 314-336-2515
Fax 314-336-2521

Professional Seal 02/28/2017

The seal on these plans are not valid with out electronic seal on cover.

Sub. No.	Rev. No.	Date	Drawn By	Submittal/Revision Description
4	3	11/28/16	IY	4TH SUBMISSION
3	2	11/8/16	IY	3RD SUBMISSION
2	1	10/19/16	IY	2ND SUBMISSION
1	-	8/10/16	IY	1ST SUBMISSION

Proprietary Notice

This drawing sheet and contents herein are property of NGG. Use of this drawing, contents or design concepts for purposes other than estimating, drawing preparation and/or manufacturing for NGG shall be cause for legal recourse by NGG.

Project Name
WEBSTER UNIVERSITY
Location
St. Louis, Missouri

Architect
CANNON DESIGN
Location
St. Louis, MO

Contractor
PARIC
Location
St. Louis, Missouri

Owner
WEBSTER UNIVERSITY
Location
St. Louis, Missouri

Drawn Date	Scale
8/10/16	AS NOTED

NGG Project No.

Drawing Title
DETAILS

Drawn By	Sheet No.
IY	416

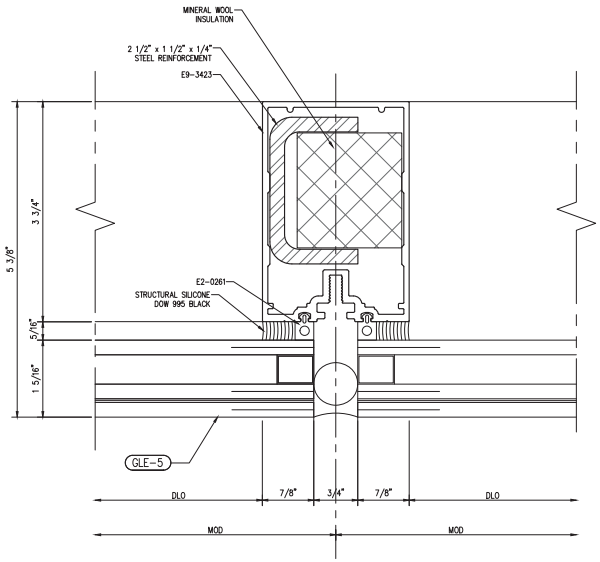

1 SSG MULLION

Scale: 1:1

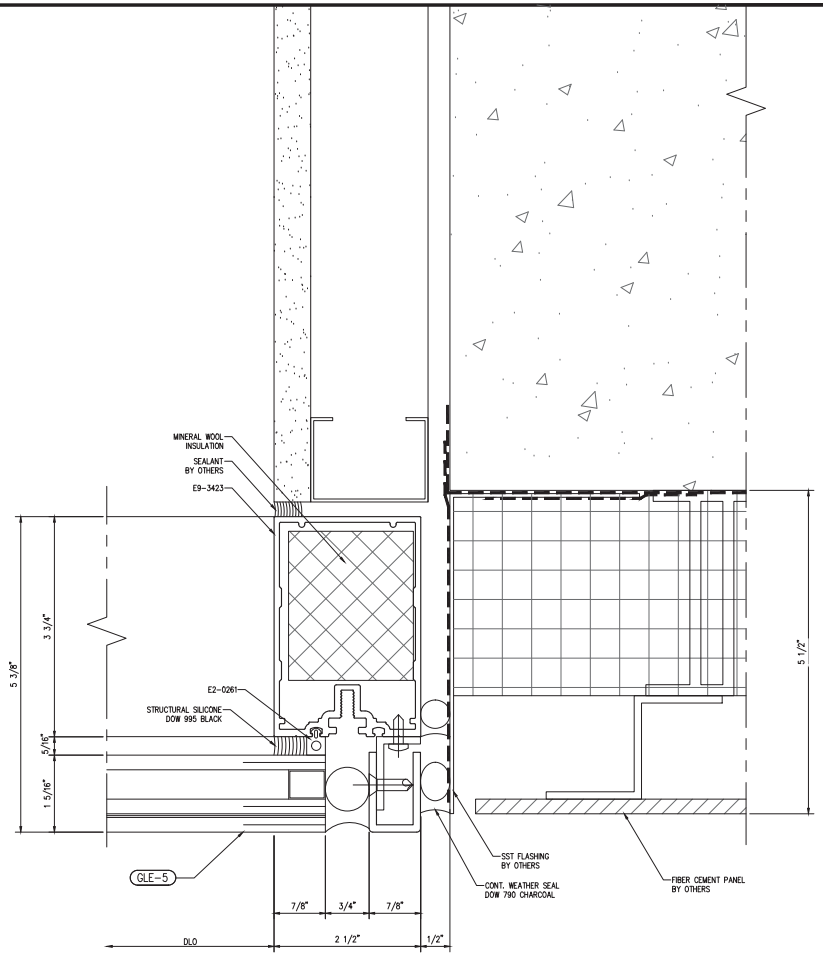

2 JAMB MULLION

REF. 2/A0422

Scale: 1:1

NGG LTD

NGG LTD, INCORPORATED
1550 Craigshire Road Suite 202
St. Louis, Missouri 63146

Tel 314-336-2515
Fax 314-336-2521

Professional Seal 02/28/2017

STATE OF MISSOURI
STEWART P. FOKE
PE-24002
PROFESSIONAL ENGINEER

The seal on these plans are not valid with out electronic seal on cover.

Sub. No.	Rev. No.	Date	Drawn. By	Submittal/Revision Description
4	3	11/28/16	IY	4TH SUBMISSION
3	2	11/8/16	IY	3RD SUBMISSION
2	1	10/19/16	IY	2ND SUBMISSION
1	–	5/17/16	IY	1ST SUBMISSION

Proprietary Notice

This drawing sheet and contents herein are property of NGG. Use of this drawing, contents or design concepts for purposes other than estimating, drawing preparation and/or manufacturing for NGG shall be cause for legal recourse by NGG.

Project Name
WEBSTER UNIVERSITY
Location
St. Louis, Missouri

Architect
CANNON DESIGN
Location
St. Louis, MO

Contractor
PARIC
Location
St. Louis, Missouri

Owner
WEBSTER UNIVERSITY
Location
St. Louis, Missouri

Drawn Date	Scale
5/17/16	AS NOTED

NGG Project No.

Drawing Title
DETAILS

Drawn By	Sheet No.
IY	417

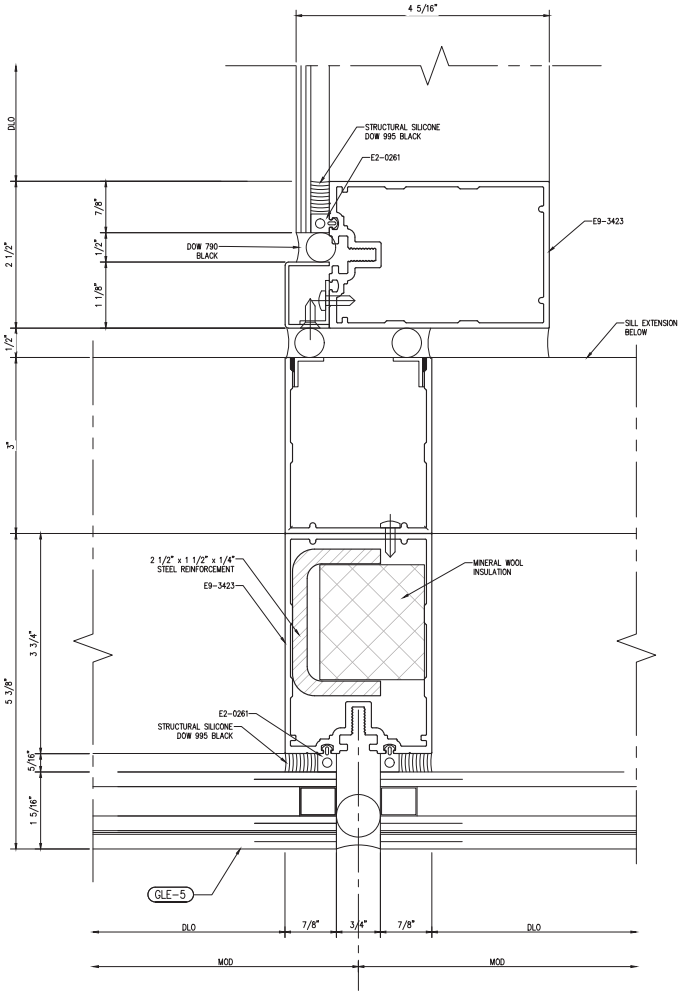

1 MULLION DETAIL
Scale: 1:1

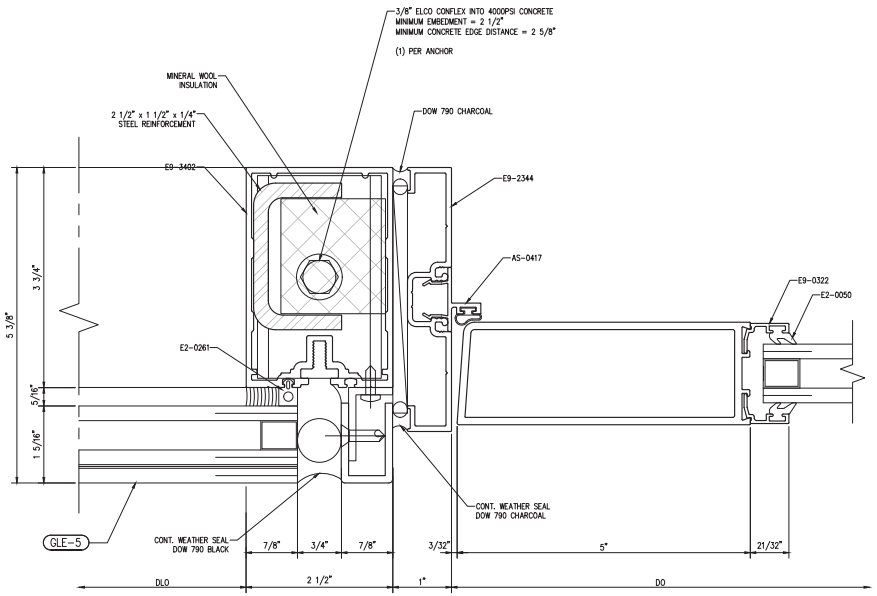

2 DOOR JAMB
Scale: 1:1

NGG LTD

NGG LTD, INCORPORATED
1850 Craigshire Road Suite 202
St. Louis, Missouri 63146

Tel 314-336-2515
Fax 314-336-2521

Professional Seal 02/28/2017

The seal on these plans are not valid with out electronic seal on cover.

Sub. No.	Rev. No.	Date	Drawn By	Submittal/Revision Description
4	3	11/29/16	IY	4TH SUBMISSION
3	2	11/8/16	IY	3RD SUBMISSION
2	1	10/19/16	IY	2ND SUBMISSION
1	–	5/17/16	IY	1ST SUBMISSION

Proprietary Notice

This drawing sheet and contents herein are property of NGG. Use of this drawing, contents or design concepts for purposes other than estimating, drawing preparation and/or manufacturing for NGG shall be cause for legal recourse by NGG.

Project Name
WEBSTER UNIVERSITY
Location
St. Louis, Missouri

Architect
CANNON DESIGN
Location
St. Louis, MO

Contractor
PARIC
Location
St. Louis, Missouri

Owner
WEBSTER UNIVERSITY
Location
St. Louis, Missouri

Drawn Date	Scale
5/17/16	AS NOTED

NGG Project No.

Drawing Title
DETAILS

Drawn By	Sheet No.
IY	418

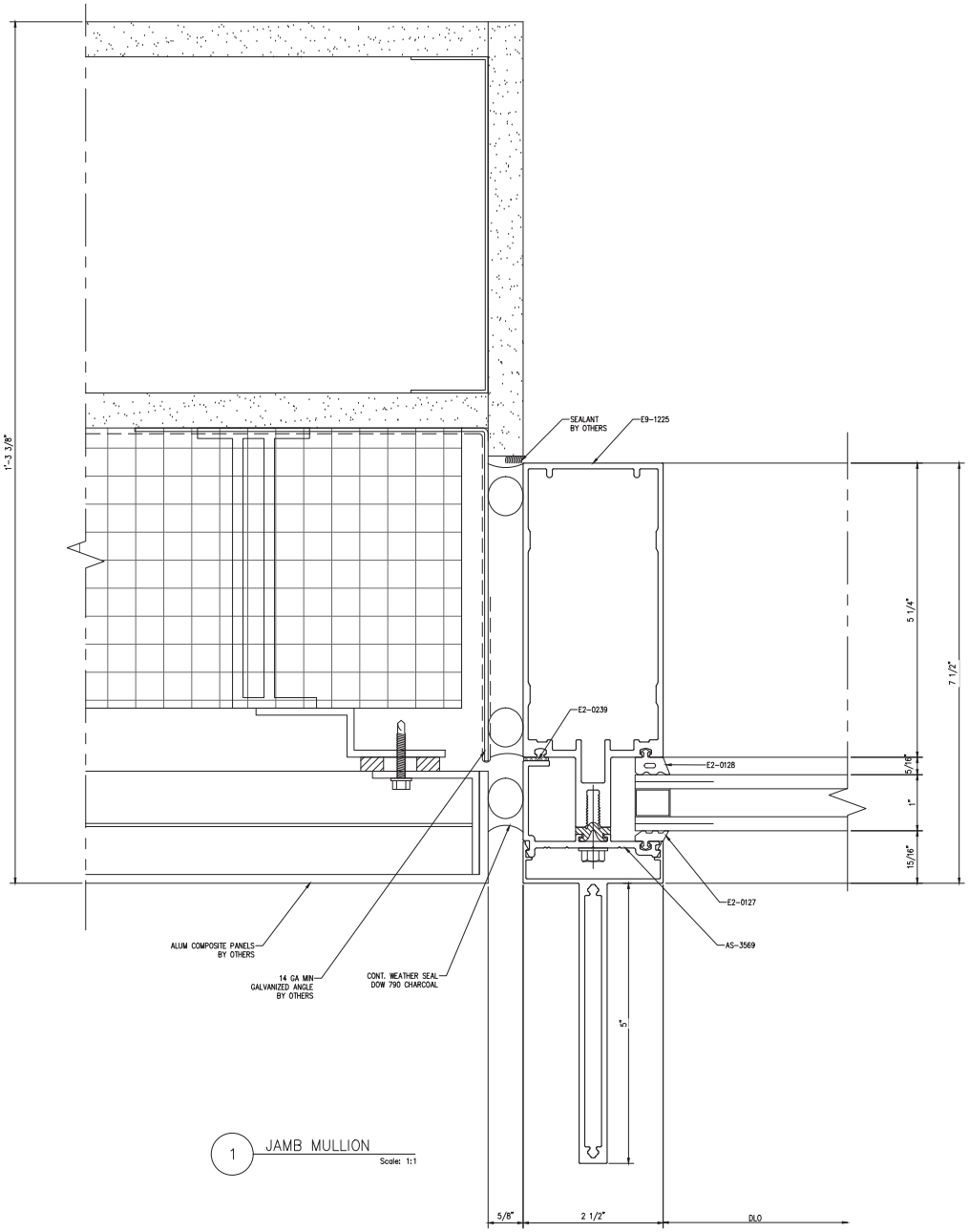

1 JAMB MULLION
Scale: 1:1

NGG LTD

NGG LTD, INCORPORATED
1550 Craigshire Road Suite 202
St. Louis, Missouri 63146

Tel 314-336-2515
Fax 314-336-2521

Professional Seal 02/28/2017

STATE OF MISSOURI
STEWART P. FISKE
NUMBER PE-24002
PROFESSIONAL ENGINEER

The seal on these plans are not valid with out electronic seal on cover.

Sub. No.	Rev. No.	Date	Drawn By	Submittal/Revision Description
4	3	11/29/16	IY	4TH SUBMISSION
3	2	11/8/16	IY	3RD SUBMISSION
1	-	10/19/16	IY	2ND SUBMISSION

Proprietary Notice

This drawing sheet and contents herein are property of NGG. Use of this drawing, contents or design concepts for purposes other than estimating, drawing preparation and/or manufacturing for NGG shall be cause for legal recourse by NGG.

Project Name
WEBSTER UNIVERSITY
Location
St. Louis, Missouri

Architect
CANNON DESIGN
Location
St. Louis, MO

Contractor
PARIC
Location
St. Louis, Missouri

Owner
WEBSTER UNIVERSITY
Location
St. Louis, Missouri

Drawn Date	Scale
5/17/16	AS NOTED

NGG Project No.

Drawing Title
DETAILS

Drawn By	Sheet No.
IY	419

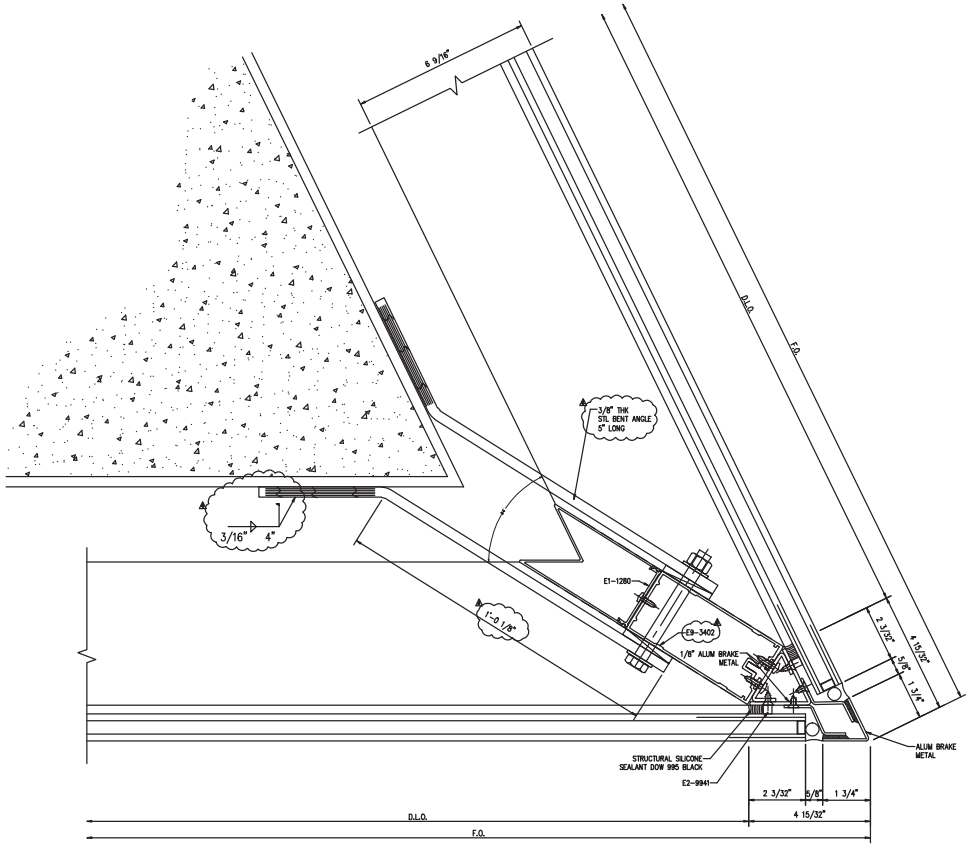

1 CORNER ANCHOR

Scale: 1:1

DEAD LOAD @ LEVEL 3

NGG LTD

NGG LTD, INCORPORATED
1850 Craigshire Road Suite 202
St. Louis, Missouri 63146

Tel 314-336-2515
Fax 314-336-2521

Professional Seal 02/28/2017

The seals on these plans are not valid with out electronic seal on cover

Sub. No.	Rev. No.	Date	Drawn. By	Submittal/Revision Description
5	4	02/23/17	RS	5TH SUBMISSION
4	3	11/29/16	IY	4RD SUBMISSION
3	2	11/8/16	IY	3RD SUBMISSION
2	1	10/10/16	IY	2ND SUBMISSION

Proprietary Notice

This drawing sheet and contents herein are property of NGG. Use of this drawing, contents or design concepts for purposes other than estimating, drawing preparation and/or manufacturing for NGG shall be cause for legal recourse by NGG.

Project Name
WEBSTER UNIVERSITY
Location
St. Louis, Missouri

Architect
CANNON DESIGN
Location
St. Louis, MO

Contractor
PARIC
Location
St. Louis, Missouri

Owner
WEBSTER UNIVERSITY
Location
St. Louis, Missouri

Drawn Date	Scale
8/10/16	AS NOTED

NGG Project No.

Drawing Title
DETAILS

Drawn By	Sheet No.
IY	420

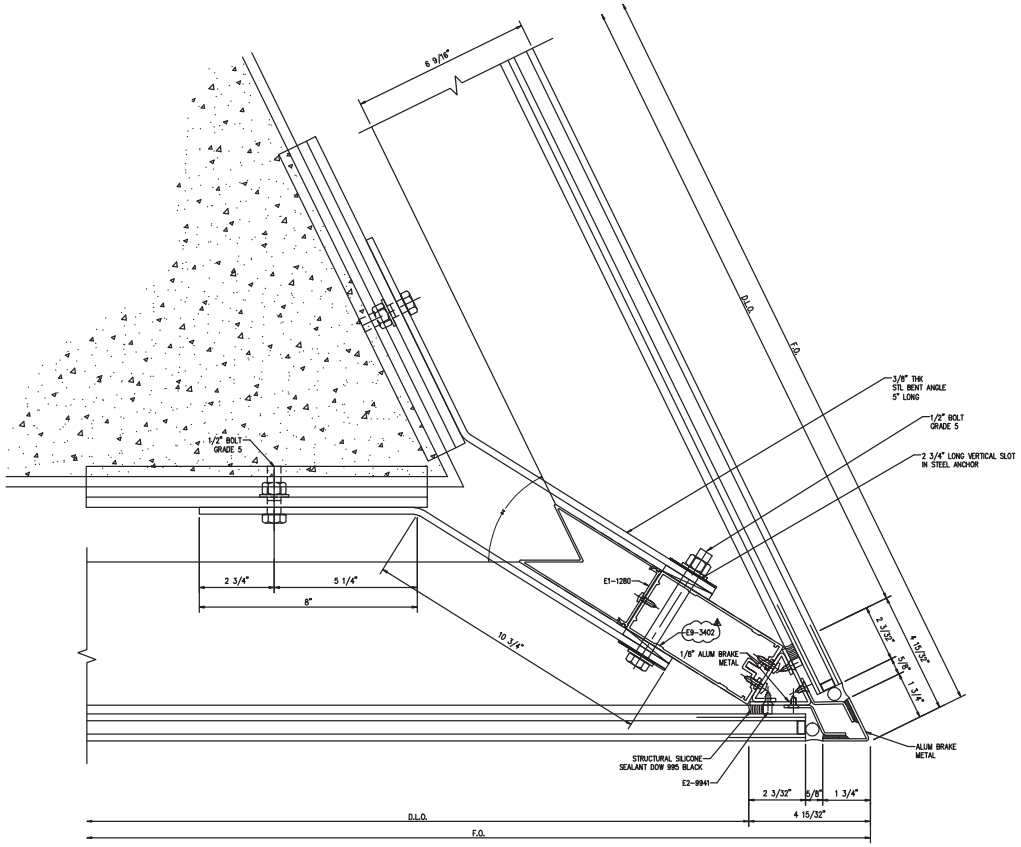

1 CORNER ANCHOR

Scale: 1:1

WIND LOAD @ LEVEL 4

NGG LTD

NGG LTD, INCORPORATED
1850 Craigshire Road Suite 202
St. Louis, Missouri 63146

Tel 314-336-2515
Fax 314-336-2521

Professional Seal 02/28/2017

The seal on these plans are not valid with out electronic seal on cover.

Sub. No.	Rev. No.	Date	Drawn By	Submittal/Revision Description
5	4	02/23/17	RS	5TH SUBMISSION
4	3	11/29/16	IY	4RD SUBMISSION
3	2	11/8/16	IY	3RD SUBMISSION
2	1	10/10/16	IY	2ND SUBMISSION

Proprietary Notice

This drawing sheet and contents herein are property of NGG. Use of this drawing, contents or design concepts for purposes other than estimating, drawing preparation and/or manufacturing for NGG shall be cause for legal recourse by NGG.

Project Name
WEBSTER UNIVERSITY
Location
St. Louis, Missouri

Architect
CANNON DESIGN
Location
St. Louis, MO

Contractor
PARIC
Location
St. Louis, Missouri

Owner
WEBSTER UNIVERSITY
Location
St. Louis, Missouri

Drawn Date	Scale
8/10/16	AS NOTED

NGG Project No.

Drawing Title
DETAILS

Drawn By	Sheet No.
IY	420A

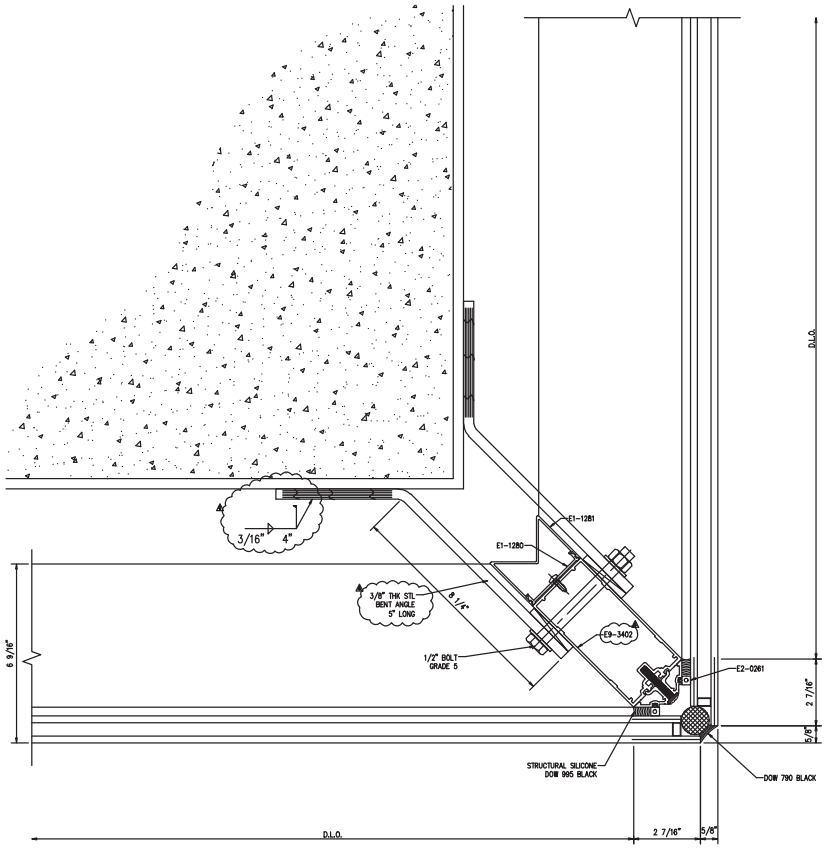

1 CORNER ANCHOR

Scale: 1:1

DEAD LOAD @ LEVEL 3

NGG LTD

NGG LTD, INCORPORATED
1850 Craigshire Road Suite 202
St. Louis, Missouri 63146

Tel 314-336-2515
Fax 314-336-2521

Professional Seal 02/28/2017

STATE OF MISSOURI
STEWART P. ROSE
NUMBER
PE-24002
PROFESSIONAL ENGINEER

The seal on these plans are not valid with out electronic seal on cover

Sub. No.	Rev. No.	Date	Drawn By	Submittal/Revision Description
5	4	02/23/17	RS	5TH SUBMISSION
4	3	11/29/16	IY	4RD SUBMISSION
3	2	11/8/16	IY	3RD SUBMISSION
2	1	10/10/16	IY	2ND SUBMISSION

Proprietary Notice

This drawing sheet and contents herein are property of NGG. Use of this drawing, contents or design concepts for purposes other than estimating, drawing preparation and/or manufacturing for NGG shall be cause for legal recourse by NGG.

Project Name
WEBSTER UNIVERSITY
Location
St. Louis, Missouri

Architect
CANNON DESIGN
Location
St. Louis, MO

Contractor
PARIC
Location
St. Louis, Missouri

Owner
WEBSTER UNIVERSITY
Location
St. Louis, Missouri

Drawn Date	Scale
8/10/16	AS NOTED

NGG Project No.

Drawing Title
DETAILS

Drawn By	Sheet No.
IY	421

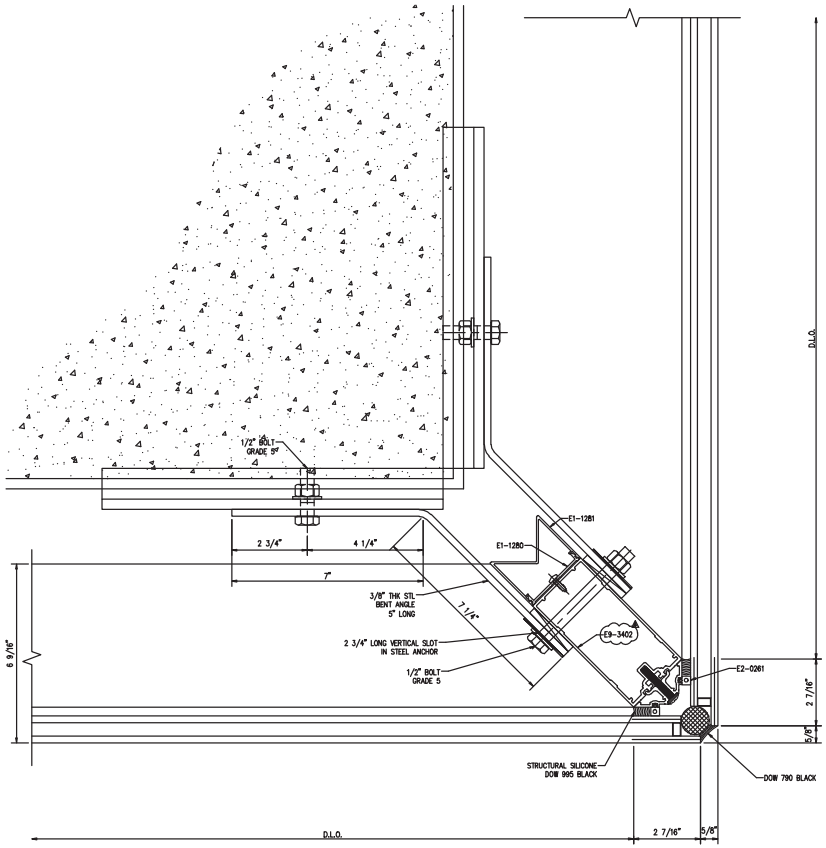

1 CORNER ANCHOR
Scale: 1:1

WIND LOAD @ LEVEL 4

NGG LTD

NGG LTD, INCORPORATED
1850 Craigshire Road Suite 202
St. Louis, Missouri 63146

Tel 314-336-2515
Fax 314-336-2521

Professional Seal 02/28/2017

STATE OF MISSOURI
STEWART P. JESKE
PE-24902

The seal on these plans are not valid with out electronic seal on cover.

Sub. No.	Rev. No.	Date	Drawn. By	Submittal/Revision Description
5	4	02/23/17	RS	6TH SUBMISSION
4	3	11/29/16	IY	5RD SUBMISSION
3	2	11/8/16	IY	
2	1	10/10/16	IY	2ND SUBMISSION

Proprietary Notice

This drawing sheet and contents herein are property of NGG. Use of this drawing, contents or design concepts for purposes other than estimating, drawing preparation and/or manufacturing for NGG shall be cause for legal recourse by NGG.

Project Name
WEBSTER UNIVERSITY
Location
St. Louis, Missouri

Architect
CANNON DESIGN
Location
St. Louis, MO

Contractor
PARIC
Location
St. Louis, Missouri

Owner
WEBSTER UNIVERSITY
Location
St. Louis, Missouri

Drawn Date	Scale
8/10/16	AS NOTED

NGG Project No.

Drawing Title
DETAILS

Drawn By	Sheet No.
IY	421A

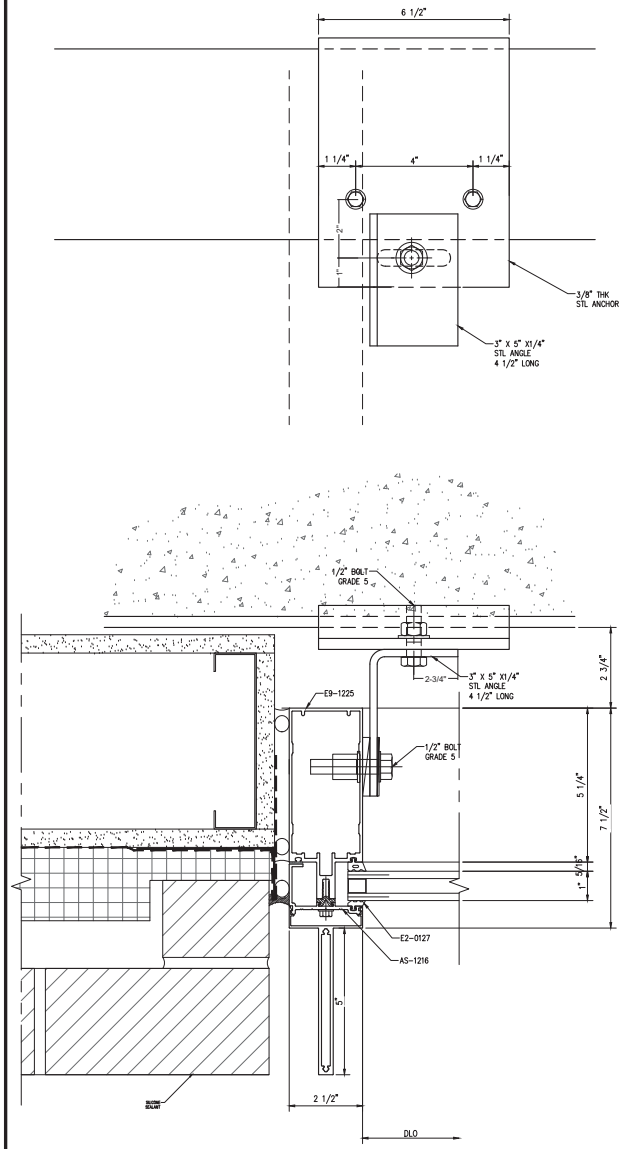

1 FLOOR ANCHOR
Scale: 1:1

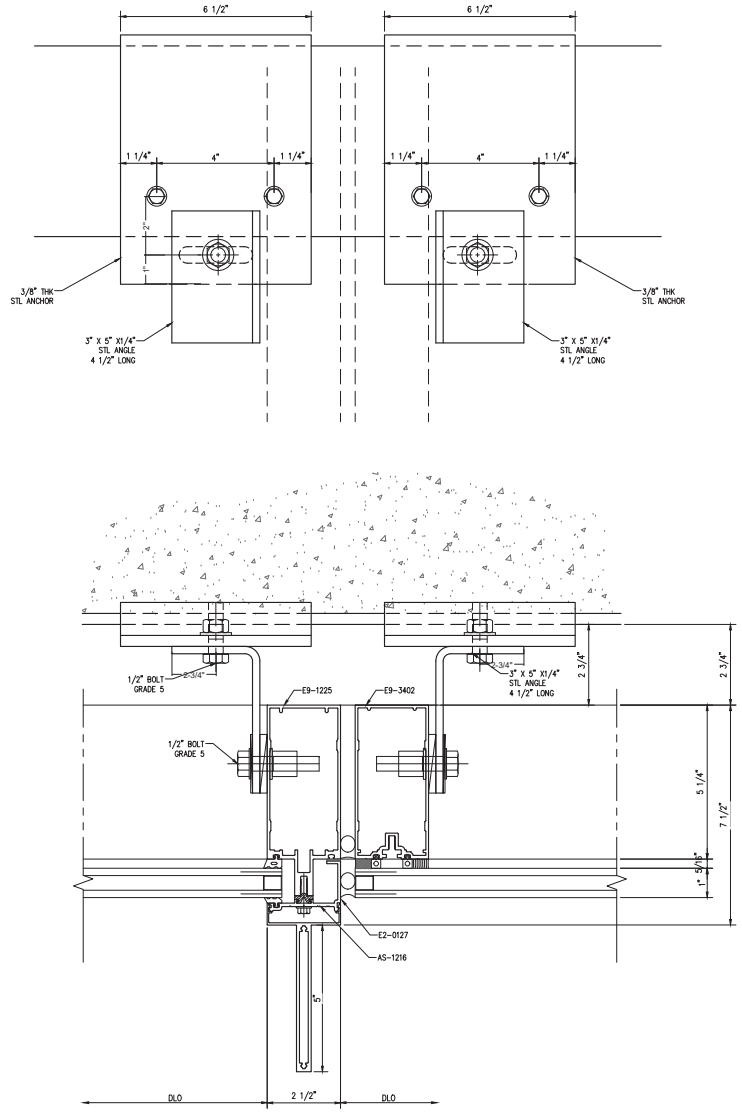

2 FLOOR ANCHOR
Scale: 1:1

NGG LTD

NGG LTD, INCORPORATED
1550 Craigshire Road Suite 202
St. Louis, Missouri 63146

Tel 314-336-2515
Fax 314-336-2521

Professional Seal 02/28/2017

STATE OF MISSOURI
STEWART P. FOSE
PE-24002
PROFESSIONAL ENGINEER

The seal on these plans are not valid with out electronic seal on cover.

Sub. No.	Rev. No.	Date	Drawn By	Submittal/Revision Description
4	3	11/29/16	IY	3RD SUBMISSION
3	2	11/8/16	IY	
2	-	10/19/16	IY	2ND SUBMISSION

Proprietary Notice

This drawing sheet and contents herein are property of NGG. Use of this drawing, contents or design concepts for purposes other than estimating, drawing preparation and/or manufacturing for NGG shall be cause for legal recourse by NGG.

Project Name
WEBSTER UNIVERSITY
Location
St. Louis, Missouri

Architect
CANNON DESIGN
Location
St. Louis, MO

Contractor
PARIC
Location
St. Louis, Missouri

Owner
WEBSTER UNIVERSITY
Location
St. Louis, Missouri

Drawn Date	Scale
8/10/16	AS NOTED

NGG Project No.

Drawing Title
DETAILS

Drawn By	Sheet No.
IY	422

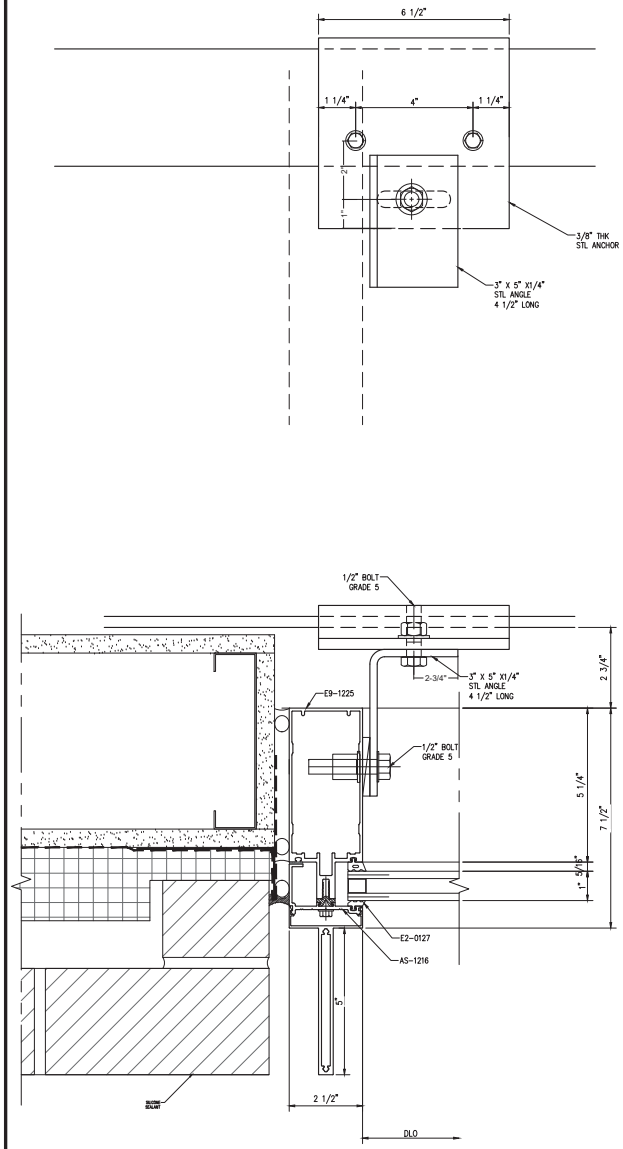

1 WIND LOAD ANCHOR @ ROOF
Scale: 1:1

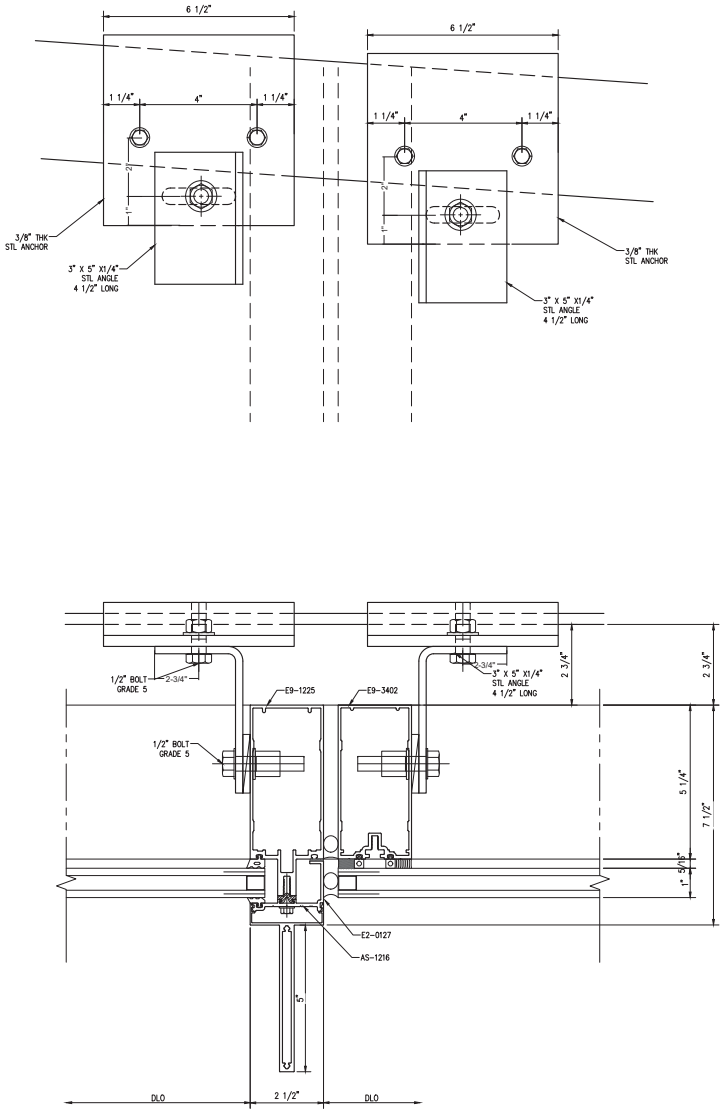

1 WIND LOAD ANCHOR @ ROOF
Scale: 1:1

NGG LTD

NGG LTD, INCORPORATED
1850 Craigshire Road Suite 202
St. Louis, Missouri 63146

Tel 314-336-2515
Fax 314-336-2521

Professional Seal 02/28/2017

STATE OF MISSOURI
STEWART P. ESKE
NUMBER
PE-24002
PROFESSIONAL ENGINEER

The seal on these plans are not valid with out electronic seal on cover.

Sub. No.	Rev. No.	Date	Drawn By	Submittal/Revision Description
4	3	11/29/16	IY	3RD SUBMISSION
3	2	11/8/16	IY	
2	-	10/19/16	IY	2ND SUBMISSION

Proprietary Notice

This drawing sheet and contents herein are property of NGG. Use of this drawing, contents or design concepts for purposes other than estimating, drawing preparation and/or manufacturing for NGG shall be cause for legal recourse by NGG.

Project Name
WEBSTER UNIVERSITY
Location
St. Louis, Missouri

Architect
CANNON DESIGN
Location
St. Louis, MO

Contractor
PARIC
Location
St. Louis, Missouri

Owner
WEBSTER UNIVERSITY
Location
St. Louis, Missouri

Drawn Date	Scale
8/10/16	AS NOTED

NGG Project No.

Drawing Title
DETAILS

Drawn By	Sheet No.
IY	423

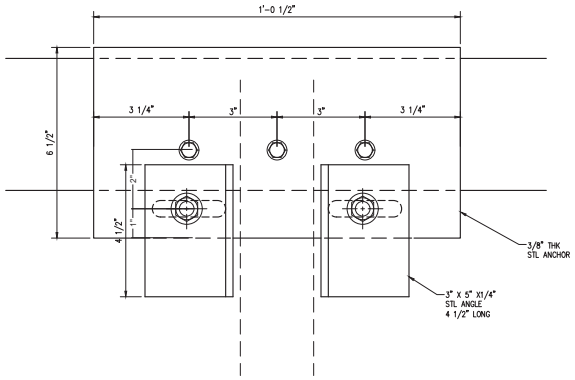

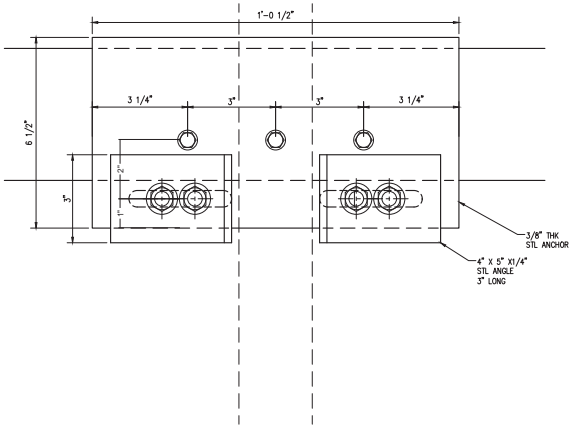

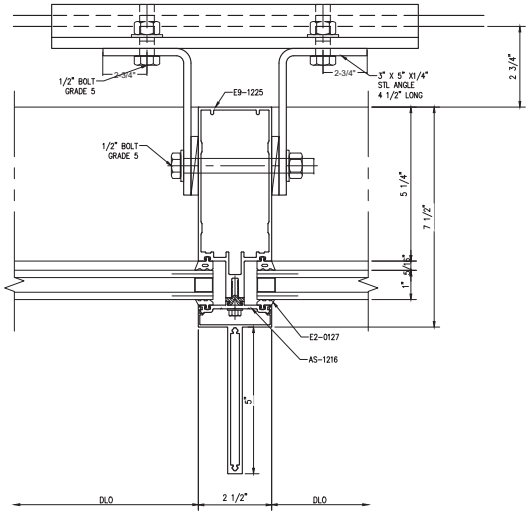

1 WIND LOAD ANCHOR @ ROOF

Scale: 1:1

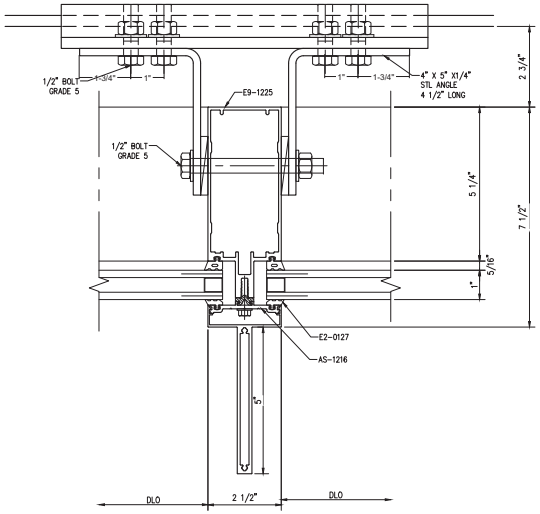

2 DEAD LOAD ANCHOR @ ROOF

Scale: 1:1

NGG LTD

NGG LTD, INCORPORATED
1550 Craigshire Road Suite 202
St. Louis, Missouri 63146

Tel 314-336-2515
Fax 314-336-2521

Professional Seal 02/28/2017

STATE OF MISSOURI
STEWART P. FOKE
PE-24002
PROFESSIONAL ENGINEER

The seal on these plans are not valid with out electronic seal on cover.

Sub. No.	Rev. No.	Date	Drawn. By	Submittal/Revision Description
4	3	11/28/16	IY	3RD SUBMISSION
3	2	11/8/16	IY	
2	-	10/19/16	IY	2ND SUBMISSION

Proprietary Notice

This drawing sheet and contents herein are property of NGG. Use of this drawing, contents or design concepts for purposes other than estimating, drawing preparation and/or manufacturing for NGG shall be cause for legal recourse by NGG.

Project Name
WEBSTER UNIVERSITY
Location
St. Louis, Missouri

Architect
CANNON DESIGN
Location
St. Louis, MO

Contractor
PARIC
Location
St. Louis, Missouri

Owner
WEBSTER UNIVERSITY
Location
St. Louis, Missouri

Drawn Date	Scale
8/10/16	AS NOTED

NGG Project No.

Drawing Title
DETAILS

Drawn By	Sheet No.
IY	424

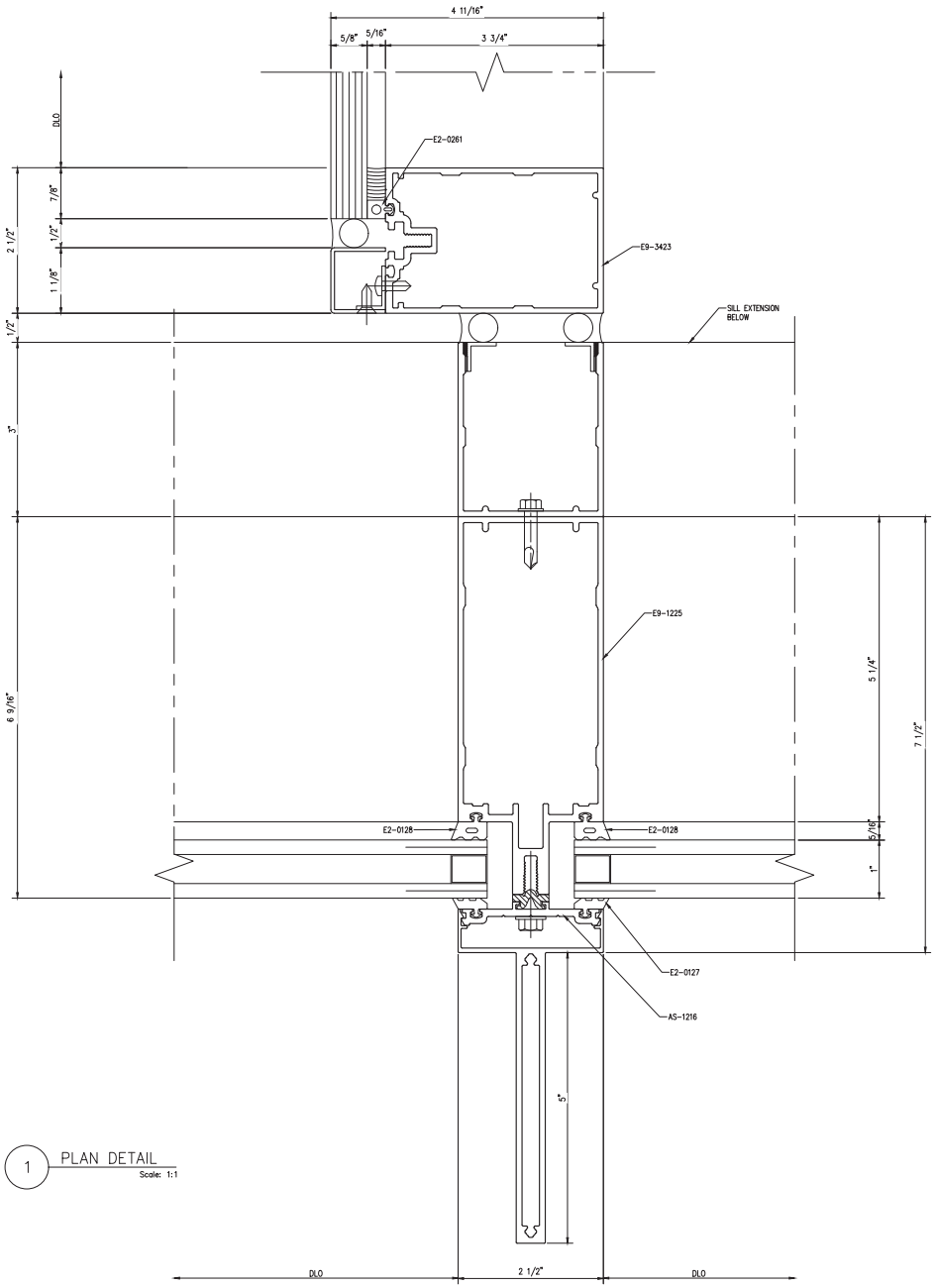

1 PLAN DETAIL
Scale: 1:1

NGG LTD

NGG LTD, INCORPORATED
1550 Craigshire Road Suite 202
St. Louis, Missouri 63146

Tel 314-336-2515
Fax 314-336-2521

Professional Seal 02/28/2017

STATE OF MISSOURI
STEWART P. FOKE
PLANNER
PE-24002
PROFESSIONAL ENGINEER

The seal on these plans are not valid with out electronic seal on cover.

Sub. No.	Rev. No.	Date	Drawn By	Submittal/Revision Description
4	3	11/29/16	IY	4TH SUBMISSION
3	2	11/8/16	IY	3RD SUBMISSION
1	-	5/17/16	IY	1ST SUBMISSION

Proprietary Notice

This drawing sheet and contents herein are property of NGG. Use of this drawing, contents or design concepts for purposes other than estimating, drawing preparation and/or manufacturing for NGG shall be cause for legal recourse by NGG.

Project Name
WEBSTER UNIVERSITY
Location
St. Louis, Missouri

Architect
CANNON DESIGN
Location
St. Louis, MO

Contractor
PARIC
Location
St. Louis, Missouri

Owner
WEBSTER UNIVERSITY
Location
St. Louis, Missouri

Drawn Date	Scale
5/17/16	AS NOTED

NGG Project No.

Drawing Title
DETAILS

Drawn By	Sheet No.
IY	425

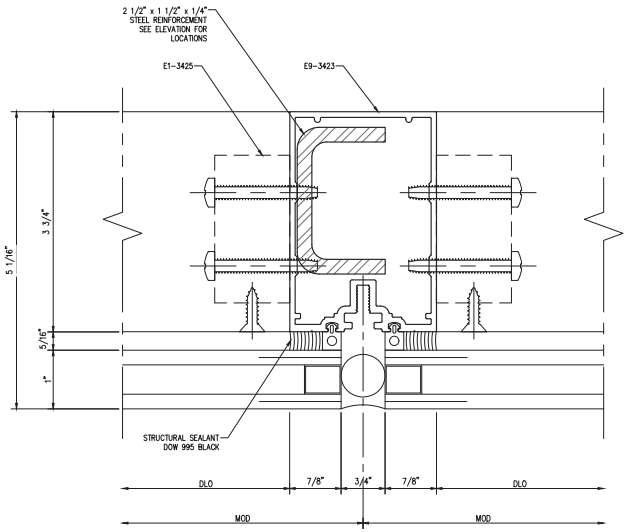

1 SSG MULLION

Scale: 1:1

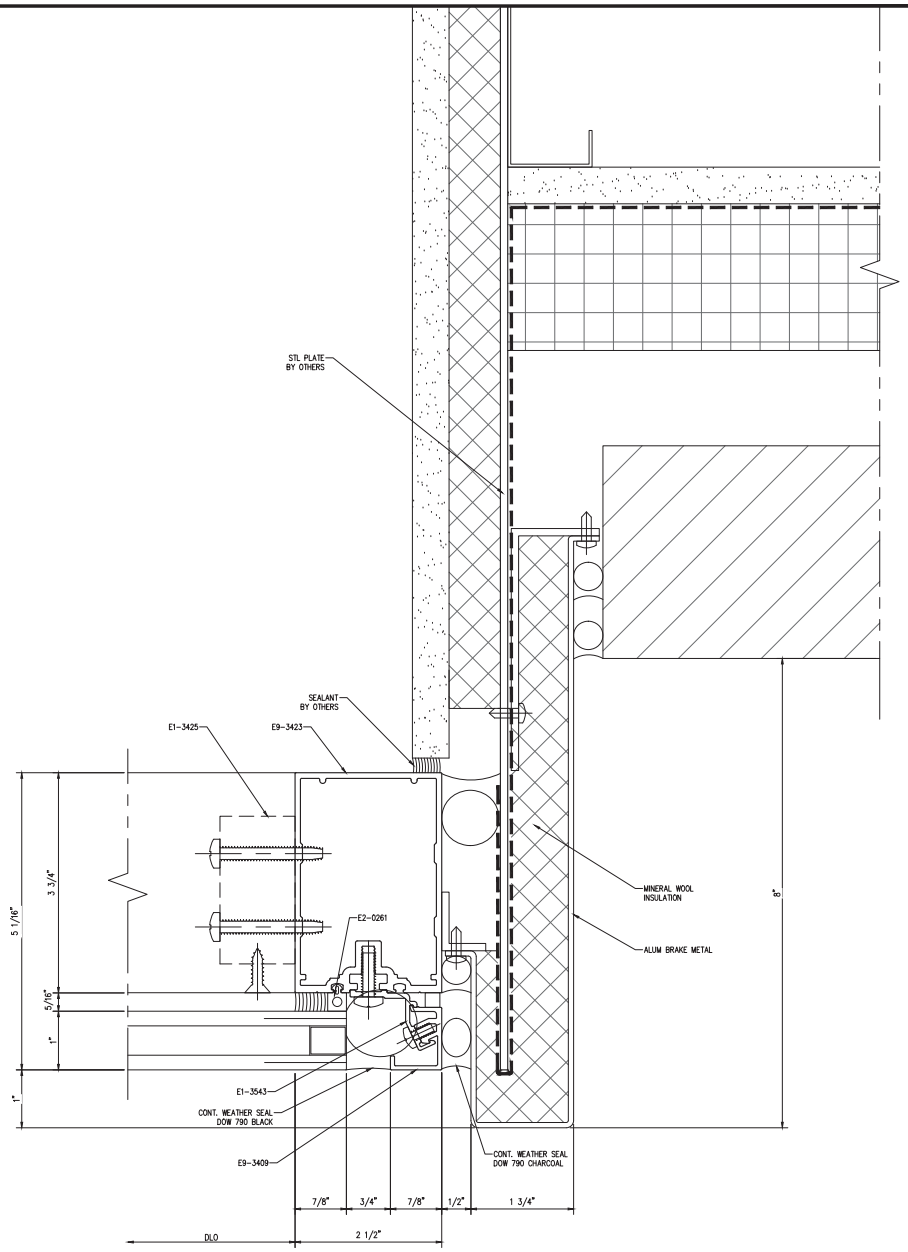

2 JAMB MULLION

Scale: 1:1

NGG LTD

NGG LTD, INCORPORATED
1550 Craigshire Road Suite 202
St. Louis, Missouri 63146

Tel 314-336-2515
Fax 314-336-2521

Professional Seal 02/28/2017

STATE OF MISSOURI
STEWART P. ROSE
PE-24002
PROFESSIONAL ENGINEER

The seal on these plans are not valid with out electronic seal on cover.

Sub. No.	Rev. No.	Date	Drawn By	Submittal/Revision Description
4	3	11/29/16	IY	4TH SUBMISSION
3	2	11/8/16	IY	3RD SUBMISSION
2	1	10/19/16	IY	2ND SUBMISSION
1	-	8/10/16	IY	1ST SUBMISSION

Proprietary Notice

This drawing sheet and contents herein are property of NGG. Use of this drawing, contents or design concepts for purposes other than estimating, drawing preparation and/or manufacturing for NGG shall be cause for legal recourse by NGG.

Project Name
WEBSTER UNIVERSITY
Location
St. Louis, Missouri

Architect
CANNON DESIGN
Location
St. Louis, MO

Contractor
PARIC
Location
St. Louis, Missouri

Owner
WEBSTER UNIVERSITY
Location
St. Louis, Missouri

Drawn Date	Scale
8/10/16	AS NOTED

NGG Project No.

Drawing Title
DETAILS

Drawn By	Sheet No.
IY	451

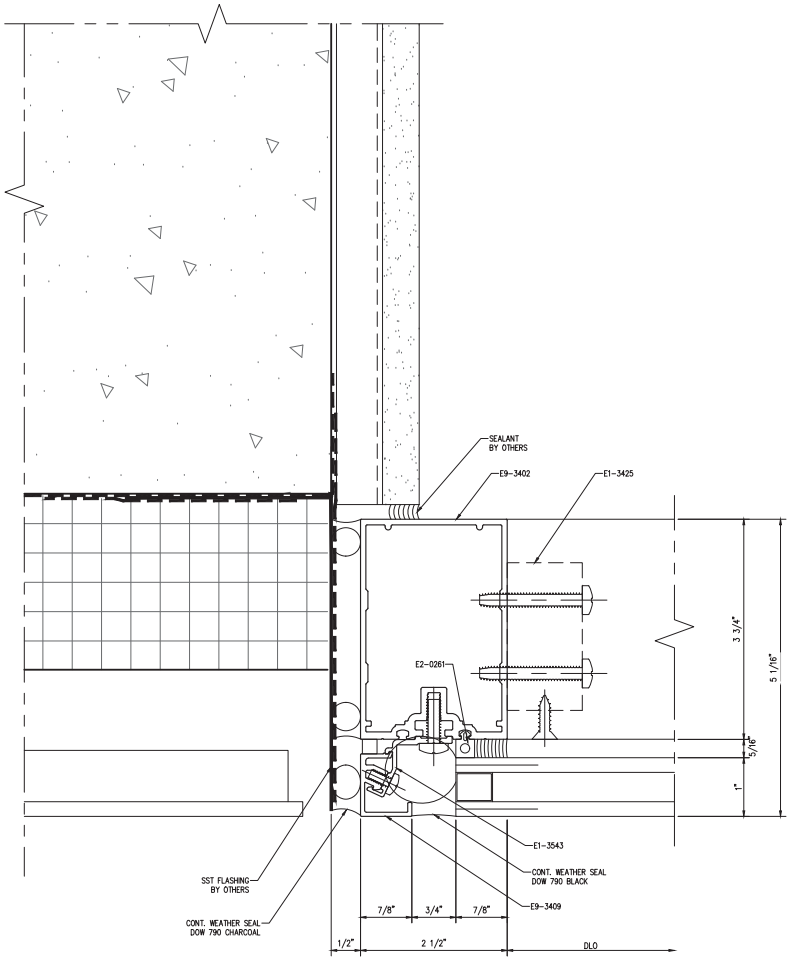

1 JAMB MULLION
Scale: 1:1

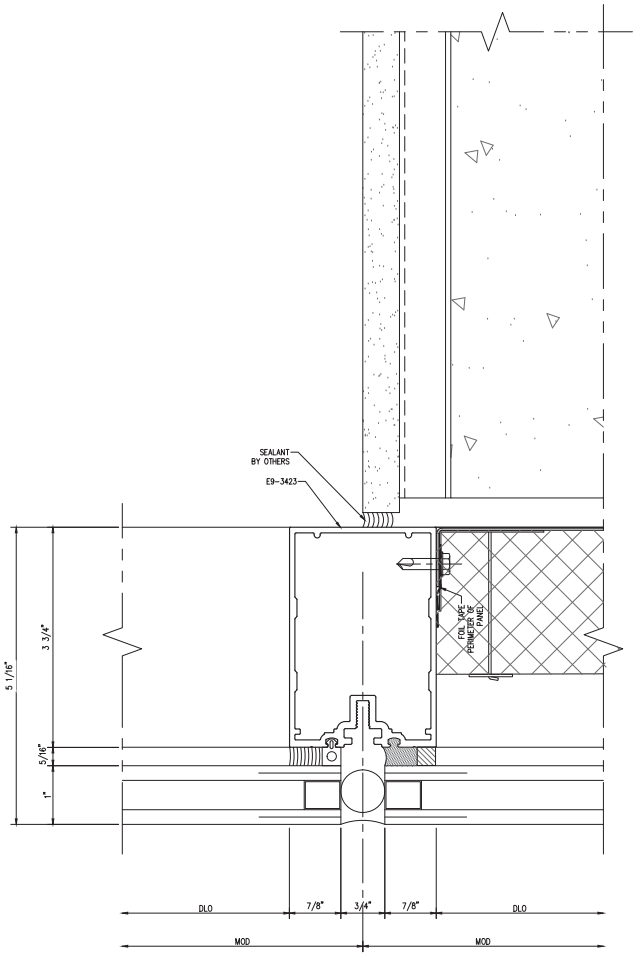

2 SSG MULLION
Scale: 1:1

NGG LTD

NGG LTD, INCORPORATED
1550 Craigshire Road Suite 202
St. Louis, Missouri 63146

Tel 314-336-2515
Fax 314-336-2521

Professional Seal 02/28/2017

STATE OF MISSOURI
STEWART P. ROSE
PE-24002
PROFESSIONAL ENGINEER

The seal on these plans are not valid with out electronic seal on cover.

Sub. No.	Rev. No.	Date	Drawn. By	Submittal/Revision Description
4	3	11/29/16	IY	4TH SUBMISSION
3	2	11/8/16	IY	3RD SUBMISSION
2	1	10/19/16	IY	2ND SUBMISSION
1	-	8/10/16	IY	1ST SUBMISSION

Proprietary Notice

This drawing sheet and contents herein are property of NGG. Use of this drawing, contents or design concepts for purposes other than estimating, drawing preparation and/or manufacturing for NGG shall be cause for legal recourse by NGG.

Project Name
WEBSTER UNIVERSITY
Location
St. Louis, Missouri

Architect
CANNON DESIGN
Location
St. Louis, MO

Contractor
PARIC
Location
St. Louis, Missouri

Owner
WEBSTER UNIVERSITY
Location
St. Louis, Missouri

Drawn Date	Scale
8/10/16	AS NOTED

NGG Project No.

Drawing Title
DETAILS

Drawn By	Sheet No.
IY	452

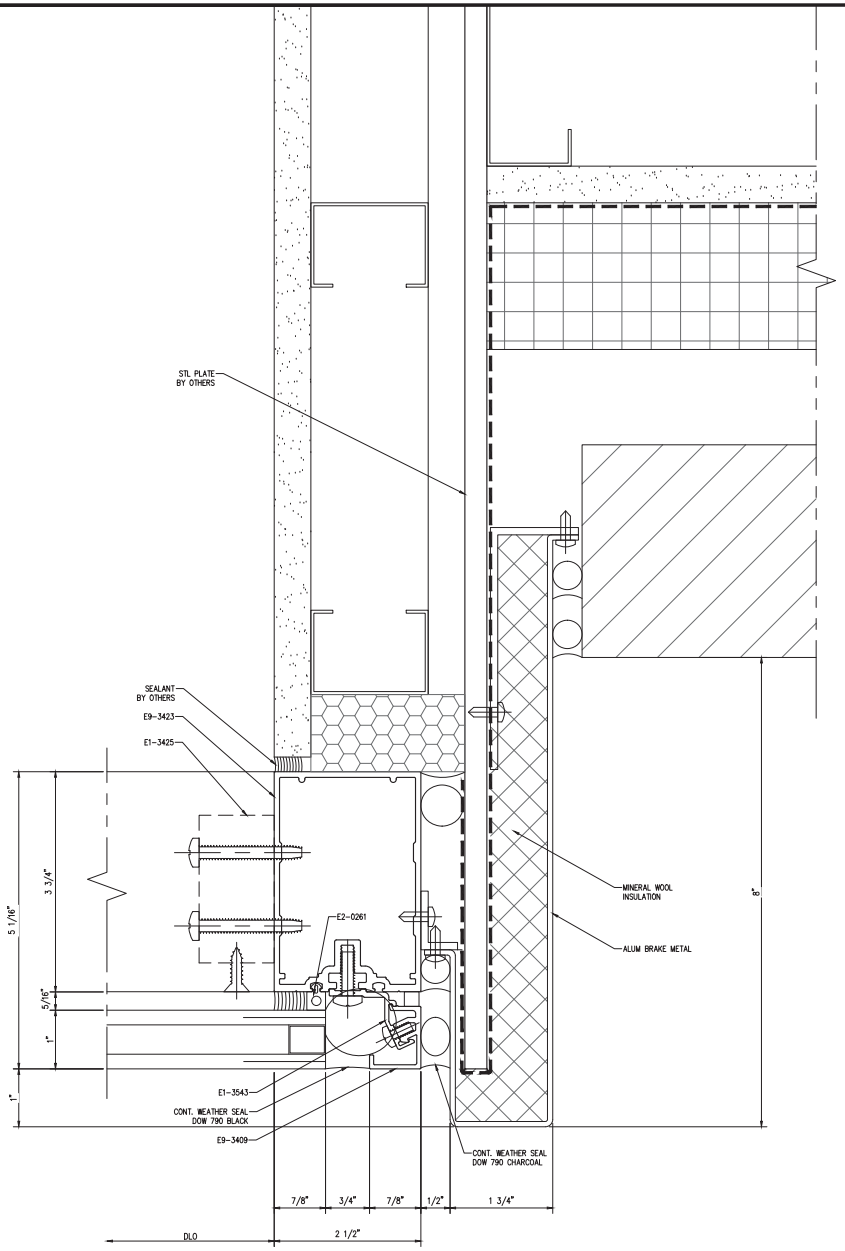

1 JAMB MULLION

Scale: 1:1

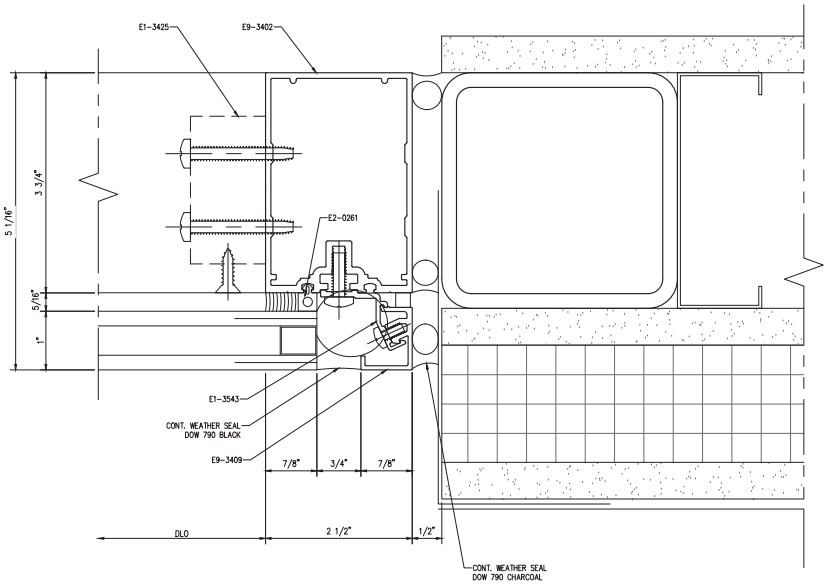

2 JAMB MULLION

Scale: 1:1

NGG LTD

NGG LTD, INCORPORATED
1550 Craigshire Road Suite 202
St. Louis, Missouri 63146

Tel 314-336-2515
Fax 314-336-2521

Professional Seal 02/28/2017

The seal on these plans are not valid with out electronic seal on cover.

Sub. No.	Rev. No.	Date	Drawn By	Submittal/Revision Description
4	3	11/29/16	IY	4TH SUBMISSION
3	2	11/8/16	IY	3RD SUBMISSION
1	–	10/19/16	IY	2ND SUBMISSION

Proprietary Notice

This drawing sheet and contents herein are property of NGG. Use of this drawing, contents or design concepts for purposes other than estimating, drawing preparation and/or manufacturing for NGG shall be cause for legal recourse by NGG.

Project Name
WEBSTER UNIVERSITY
Location
St. Louis, Missouri

Architect
CANNON DESIGN
Location
St. Louis, MO

Contractor
PARIC
Location
St. Louis, Missouri

Owner
WEBSTER UNIVERSITY
Location
St. Louis, Missouri

Drawn Date	Scale
8/10/16	AS NOTED

NGG Project No.

Drawing Title
DETAILS

Drawn By	Sheet No.
IY	453

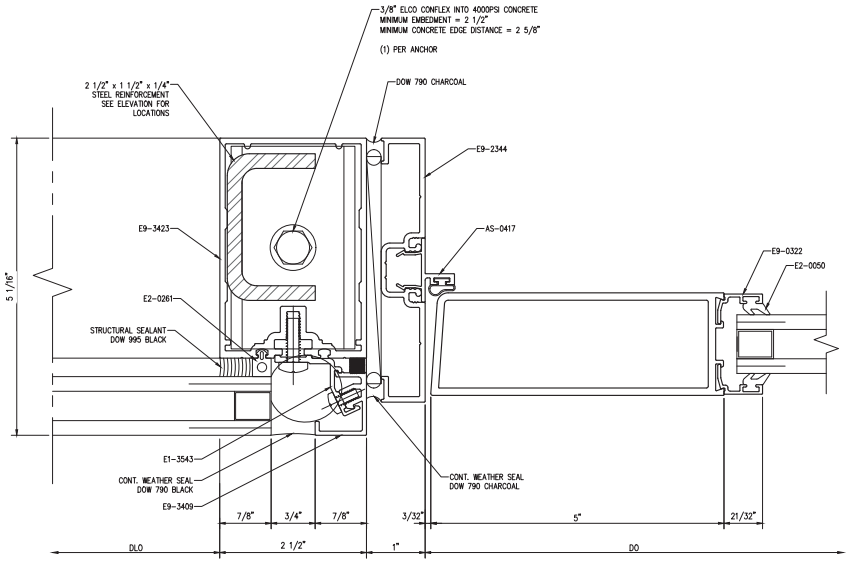

1 DOOR JAMB

Scale: 1:1

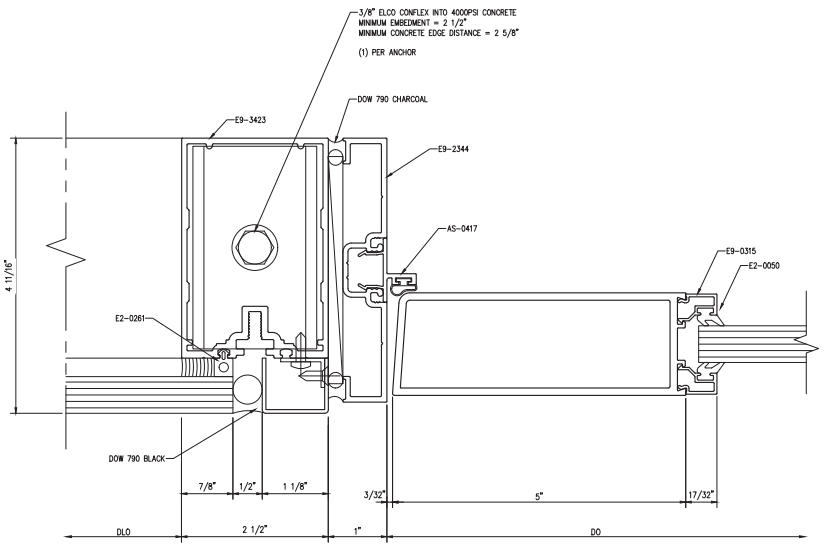

2 DOOR JAMB

Scale: 1:1

NGG LTD

NGG LTD, INCORPORATED
1550 Craigshire Road Suite 202
St. Louis, Missouri 63146

Tel 314-336-2515
Fax 314-336-2521

Professional Seal 02/28/2017

STATE OF MISSOURI
STEWART P. FOSE
PE-24002
PROFESSIONAL ENGINEER

The seal on these plans are not valid with out electronic seal on cover.

Sub. No.	Rev. No.	Date	Drawn. By	Submittal/Revision Description
4	3	11/28/16	IY	4TH SUBMISSION
3	2	11/8/16	IY	3RD SUBMISSION
1	-	10/19/16	IY	2ND SUBMISSION

Proprietary Notice

This drawing sheet and contents herein are property of NGG. Use of this drawing, contents or design concepts for purposes other than estimating, drawing preparation and/or manufacturing for NGG shall be cause for legal recourse by NGG.

Project Name
WEBSTER UNIVERSITY
Location
St. Louis, Missouri

Architect
CANNON DESIGN
Location
St. Louis, MO

Contractor
PARIC
Location
St. Louis, Missouri

Owner
WEBSTER UNIVERSITY
Location
St. Louis, Missouri

Drawn Date	Scale
8/10/16	AS NOTED

NGG Project No.

Drawing Title
DETAILS

Drawn By	Sheet No.
IY	454

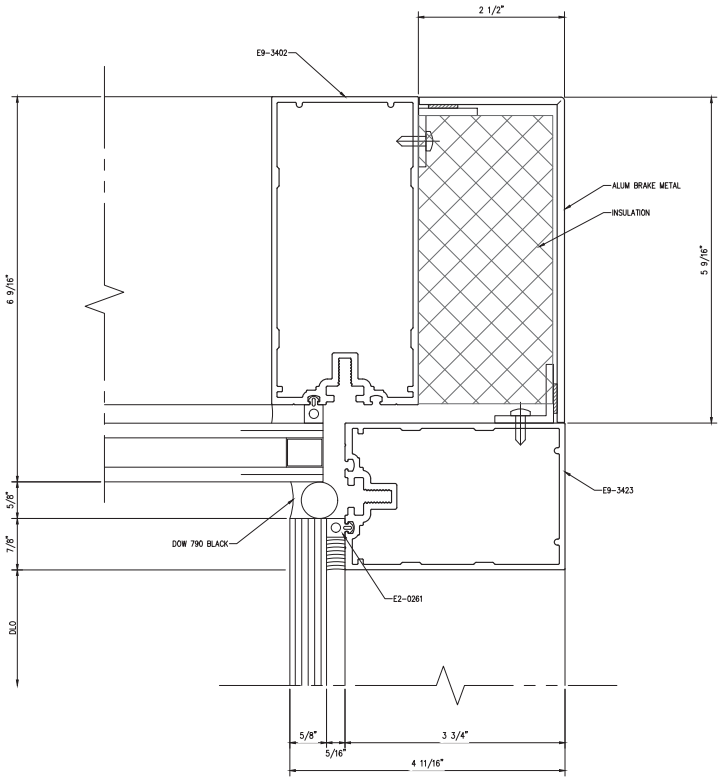

1 CORNER @ INTERIOR ENTRANCE
Scale: 1:1

NGG LTD

NGG LTD, INCORPORATED
1550 Craigshire Road Suite 202
St. Louis, Missouri 63146

Tel 314-336-2515
Fax 314-336-2521

Professional Seal 02/28/2017

The seal on these plans are not valid with out electronic seal on cover.

Sub. No.	Rev. No.	Date	Drawn. By	Submittal/Revision Description
4	3	11/29/16	IY	4TH SUBMISSION
3	2	11/8/16	IY	3RD SUBMISSION
1	-	8/10/16	IY	1ST SUBMISSION

Proprietary Notice

This drawing sheet and contents herein are property of NGG. Use of this drawing, contents or design concepts for purposes other than estimating, drawing preparation and/or manufacturing for NGG shall be cause for legal recourse by NGG.

Project Name
WEBSTER UNIVERSITY
Location
St. Louis, Missouri

Architect
CANNON DESIGN
Location
St. Louis, MO

Contractor
PARIC
Location
St. Louis, Missouri

Owner
WEBSTER UNIVERSITY
Location
St. Louis, Missouri

Drawn Date	Scale
8/10/16	AS NOTED

NGG Project No.

Drawing Title
DETAILS

Drawn By	Sheet No.
IY	455

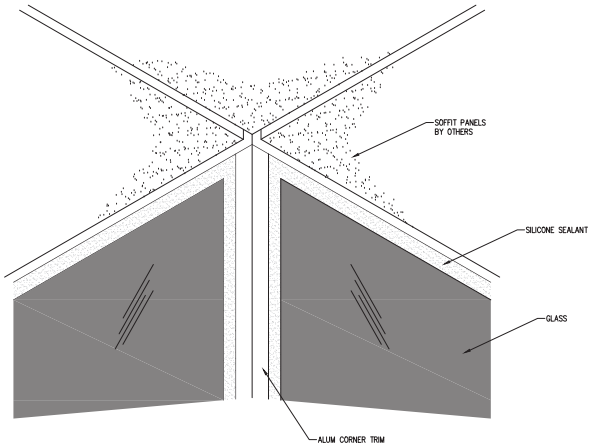

1 CORNER ISOMETRIC AT SOFFIT 2ND FLOOR
Scale: NTS

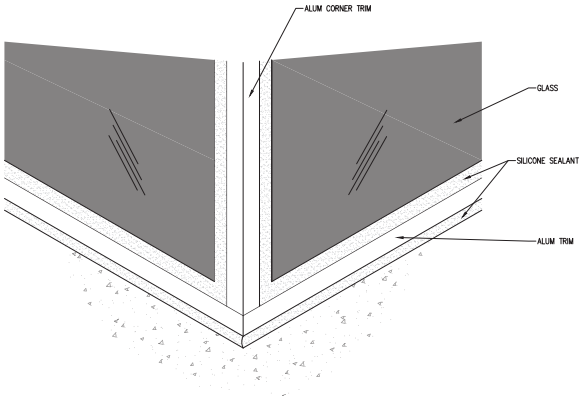

2 CORNER ISOMETRIC AT SILL 2ND FLOOR
Scale: NTS

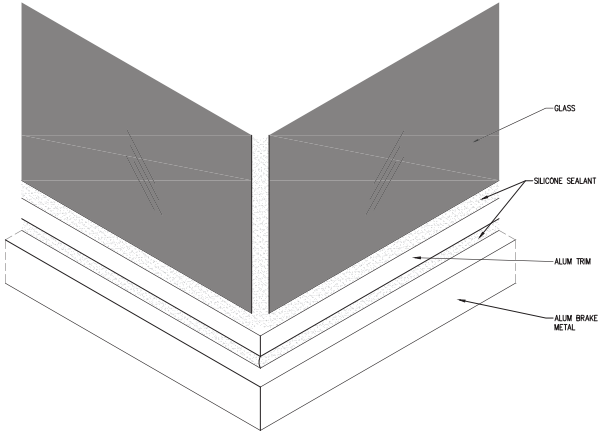

3 CORNER ISOMETRIC AT SILL 3RD FLOOR
Scale: NTS
VIEW FROM ABOVE

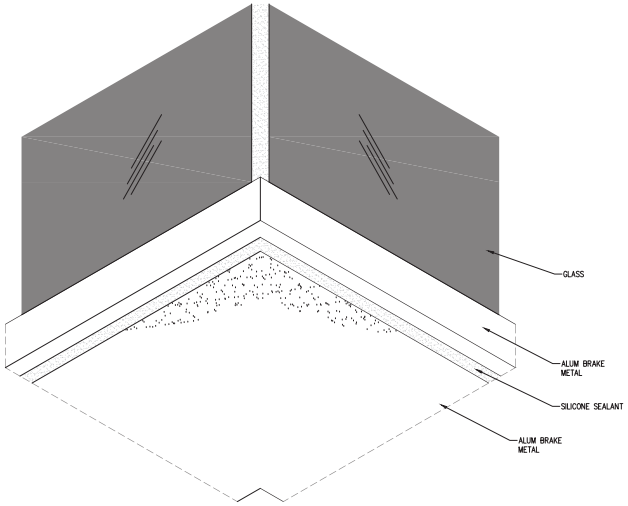

4 CORNER ISOMETRIC AT SILL 3RD FLOOR
Scale: NTS
VIEW FROM BELOW

NGG LTD

NGG LTD, INCORPORATED
1550 Craigshire Road Suite 202
St. Louis, Missouri 63146

Tel 314-336-2515
Fax 314-336-2521

Professional Seal 02/28/2017

The seal on these plans are not valid with out electronic seal on cover.

Sub. No.	Rev. No.	Date	Drawn By	Submittal/Revision Description
1	-	8/10/16	IY	1ST SUBMISSION

Proprietary Notice

This drawing sheet and contents herein are property of NGG. Use of this drawing, contents or design concepts for purposes other than estimating, drawing preparation and/or manufacturing for NGG shall be cause for legal recourse by NGG.

Project Name
WEBSTER UNIVERSITY
Location
St. Louis, Missouri

Architect
CANNON DESIGN
Location
St. Louis, Missouri

Contractor
PARIC
Location
St. Louis, Missouri

Owner
WEBSTER UNIVERSITY
Location
St. Louis, Missouri

Drawn Date	Scale
08/10/16	AS NOTED

NGG Project No.

Drawing Title
ISOMETRIC VIEWS

Drawn By	Sheet No.
IY	500

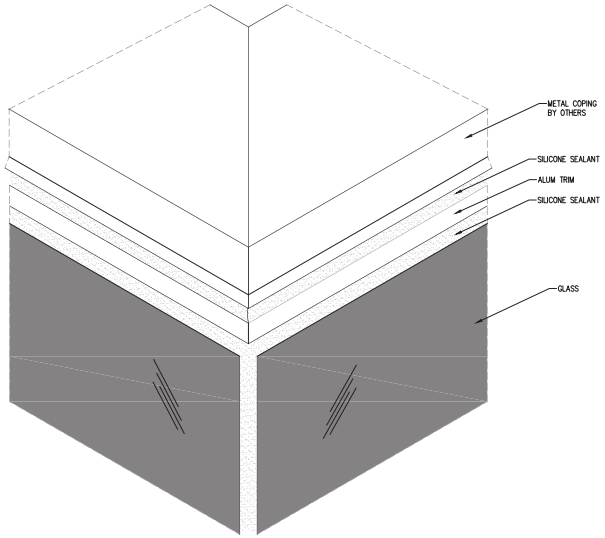

1 CORNER ISOMETRIC AT ROOF
Scale: NTS

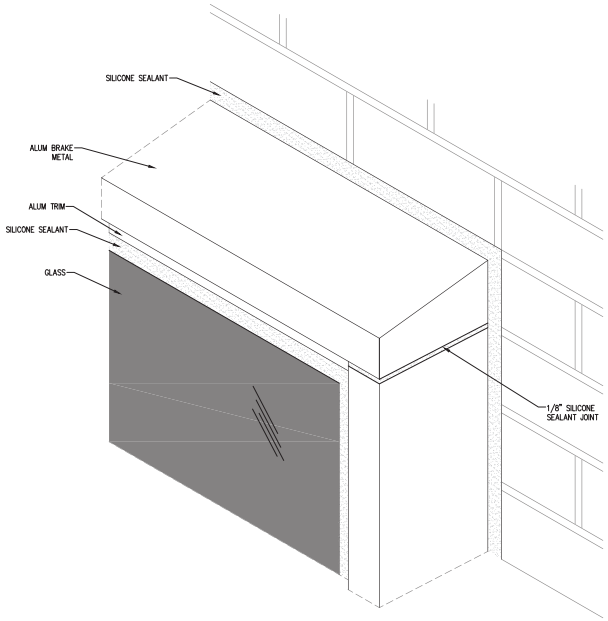

2 ISOMETRIC AT PROJECTED WINDOW
Scale: NTS

NGG LTD

NGG LTD, INCORPORATED
1550 Craigshire Road Suite 202
St. Louis, Missouri 63146

Tel 314-336-2515
Fax 314-336-2521

Professional Seal 02/28/2017

The seal on these plans are not valid with out electronic seal on cover.

Sub. No.	Rev. No.	Date	Drawn By	Submittal/Revision Description
1	–	8/10/16	IY	1ST SUBMISSION

Proprietary Notice

This drawing sheet and contents herein are property of NGG. Use of this drawing, contents or design concepts for purposes other than estimating, drawing preparation and/or manufacturing for NGG shall be cause for legal recourse by NGG.

Project Name
WEBSTER UNIVERSITY
Location
St. Louis, Missouri

Architect
CANNON DESIGN
Location
St. Louis, Missouri

Contractor
PARIC
Location
St. Louis, Missouri

Owner
WEBSTER UNIVERSITY
Location
St. Louis, Missouri

Drawn Date	Scale
08/10/16	AS NOTED

NGG Project No.

Drawing Title
ISOMETRIC VIEWS

Drawn By	Sheet No.
IY	501

CANNONDESIGN

SUBMITTAL IDENTIFICATION SHEET

To be completed by Contractor/CM

WEBSTER UNIVERSITY ISB
PROJECT NAME

8274 BIG BEND BLVD
ADDRESS

NUMBER

WEBSTER UNIVERSITY
OWNER

CANNON DESIGN
ARCHITECT / ENGINEER

Joe Voypick
SUBMITTED BY

084423-024
CONTRACTOR / CM SUBMITTAL NO.

CANNON DESIGN SUBMITTAL NO.

DRAWING / DETAIL REFERENCE

084423
SPECIFICATION SECTION / PARAGRAPH

MANUFACTURER / SUPPLIER

ITEM / PRODUCT ID

REQUIRED DATE

PRIORITY

CRITICAL

ITEM BEING SUBMITTED (check only one)

- ◯ Shop Drawings
- ◯ Samples (_____ copies)
- ◯ LEED Submittal
- ◯ Certification / Qualifications
- ◯ Record Documents
- ◯ Product Data
- ◯ Coordination Drawing
- ◯ Calculations
- ◯ Schedules
- ◯ O&M Manuals
- ◯ Other _____

ITEM BEING SUBMITTED FOR (check only one)

◯ Action ◯ Information Only ◯ Record

REMARKS OR DEVIATIONS

Sealed Curtainwall shop drawings. Files will not merge so shop drawings emailed to Melissa Pirtle and Kelvin Patel on 3/24.

CONTRACTOR / CM CERTIFICATION
(SUBMITTALS NOT CERTIFIED WILL BE RETURNED WITHOUT REVIEW)

PARIC

PARIC CORPORATION
SUBMITTAL STAMP

THIS SHOP DRAWING HAS BEEN REVIEWED BY PARIC CORPORATION

Subcontractor remains responsible for dimensions, quantities, coordination with other trades and compliance with contract documents.

By:
Devin D. Gates

Joe Voypick — REVIEWED BY
3/24/17 — DATE

To be completed by Reviewer

08 4423-024
CANNON DESIGN SUBMITTAL NUMBER

3/24/17
RECEIVED DATE

◯ A. No Exceptions Taken
No further review of submittal is required.

◯ B. Make Corrections Noted in the final sealed copy submittal
Incorporate corrections in work; resubmission is not required.

◯ C. Revise and Resubmit
Revise as noted, and resubmit for review.

◯ D. Rejected
Submittal is not in compliance with Contract Documents; provide new submittal.

◯ E. For Record / Information Only
Submittal was reviewed for Record / Information purposes only.

◯ F. Not Required for Review
Submittal is not required by Contract Documents and has not been reviewed.

Review is for conformance with the design concept of this project and for general compliance with contract documents. Contractor is responsible for quantities, dimensions and compliance with contract documents and for information that pertains to fabrication processes, construction techniques and coordination of this work with all trades which will be affected thereby. This review is null and void if submittal deviates from contract documents and does not indicate or note deviations.

A/E COMMENTS ◯ See attached sheet(s) for additional comments

REVIEWED BY

2/25/17
DATE

WEBSTER UNIVERSITY
INTERDISCIPLINARY SCIENCE BUILDING
EXTERIOR CURTAIN WALL

MATERIALS

1. ALUMINUM FRAMING SYSTEMS:
   CURTAINWALL EGS-1:
   YKK YCW 750 SSG – 2 1/2" X 7 1/2", 2-SIDED SSG CURTAIN WALL SYSTEM WITH STRUCTURALLY GLAZED HORIZONTALS AND CAPTURED MULLIONS WITH 5" DEEP VERTICAL FACE COVER
   CURTAINWALL EGS-2:
   YKK YCW 750 SSG – 2 1/2" X 6 9/16", 4-SIDED SSG CURTAIN WALL SYSTEM
   CURTAINWALL EGS-3:
   YKK YCW 750 SSG – 2 1/2" X 5 1/16", 4-SIDED SSG CURTAIN WALL SYSTEM

2. ALUMINUM FINISH
   HIGH PERFORMANCE ORGANIC FINISH: 70% PVDF THREE-COAT FLUOROPOLYMER FINISH
   COLORS TO BE:
   COLOR 1 – DURANAR SUNSTORM PEWTER UC125923F
   COLOR 2 – DURANAR BLACK UC40577

3. STEEL
   A. STEEL ACCESSORIES USED TO ANCHOR OR REINFORCE ALUMINUM FRAMING OR PANELS SHALL COMPLY WITH THE FOLLOWING SPECIFICATIONS:
   a. ASTM A36 FOR STRUCTURAL SHAPES, PLATES, AND BARS
   b. ZINC RICH PRIME PAINT AFTER FABRICATION

4. SEALANTS
   SEALANT #1 – WEATHER SEALANT AT GLASS DOW 790 COLOR BLACK
   SEALANT #2 – STRUCTURAL SILICONE DOW 995 COLOR BLACK
   SEALANT #3 – PERIMETER WEATHER SEALANT DOW 790 COLOR CHARCOAL

5. MISCELANEOUS
   A. SHIMS SHALL BE HORSESHOE SHAPED HIGH IMPACT POLYSTYRENE, UNLESS NOTED OTHERWISE.
   B. BOND BREAKER TAPE SHALL BE A POLYETHYLENE FILM TAPE WITH ADHESIVE ONE SIDE, OR OTHER MATERIAL SHOWN TO PRODUCE A LACK OF ADHESION IN TESTING DONE BY THE SEALANT'S MANUFACTURER.

6. GLASS:

GLE-1
1" CLEAR VNE1-63 INSULATING GLASS UNITS:
1/4" CLEAR VNE-63 #2 HS
1/2" AIR
1/4" CLEAR HS

GLE-1T
1" CLEAR VNE1-63 INSULATING GLASS UNITS:
1/4" CLEAR VNE-63 #2 TE
1/2" AIR
1/4" CLEAR TE

GLE-2
1" VNE1-63 INSULATING SPANDREL GLASS UNITS:
1/4" CLEAR HS VNE-63 #2
1/2" AIR
1/4" CLEAR HS W/ V908 GRAY VIRASPAN #4

GLE-3
1" CLEAR INSULATING GLASS UNITS W/ SILKSCREEN:
1/4" CLEAR HS VNE-63 #2, V908 GRAY SILKSCREEN #5006 – 40% #2
1/2" AIR
1/4" CLEAR HS
PER SPECIFICATION, SILKSCREENED FRIT ON 40% OF THE GLASS SURFACE.

GLE-4
1" CLEAR INSULATING SPANDREL GLASS UNITS WITH SILKSCREEN:
1/4" CLEAR HS VNE1-63 #2, V908 GRAY SILKSCREEN #5006 – 40% #2
1/2" AIR
1/4" CLEAR HS W/ V908 GRAY VIRASPAN #4
PER SPECIFICATION, SILKSCREENED FRIT ON 40% OF THE GLASS SURFACE.

GLE-5
1 5/16" CLEAR VNE1-63 LAMINATED INSULATING GLASS UNITS:
1/4" CLEAR HS, 0.060 CLEAR PVB, 1/4" CLEAR VNE1-63 #4 HS
1/2" AIR
1/4" CLEAR TE

GLI-3
1/4" CLEAR TEMPERED

GLI-4
5/8" CLEAR TEMPERED

T TEMPERED GLASS

ADD DESIGNATION

DRAWING INDEX

001.....COVER SHEET
102-104.....FLOOR PLANS
200-220.....CURTAIN WALL ELEVATIONS
300-325.....SECTION DETAILS EGS-1 AND EGS-2
351-360.....SECTION DETAILS EGS-3
400-425.....PLAN DETAILS EGS-1 AND EGS-2
451-455.....PLAN DETAILS EGS-3

NGG LTD

NGG LTD, INCORPORATED
1850 Craigshire Road Suite 202
St. Louis, Missouri 63146

Tel 314-336-2515
Fax 314-336-2521

Professional Seal

Sub. No.	Rev. No.	Date	Drawn By	Submitted/Revision Description
3	2	11/8/16	IY	3RD SUBMISSION
2	1	10/19/16	IY	2ND SUBMISSION
1	–	8/16/16	IY	1ST SUBMISSION

Proprietary Notice

This drawing sheet and contents herein are property of NGG. Use of this drawing, contents or design concepts for purposes other than estimating, drawing preparation and/or manufacturing for NGG shall be cause for legal recourse by NGG.

Project Name
WEBSTER UNIVERSITY
Location
St. Louis, Missouri

Architect
CANNON DESIGN
Location
St. Louis, MO

Contractor
PARIC
Location
St. Louis, Missouri

Owner
WEBSTER UNIVERSITY
Location
St. Louis, Missouri

Drawn Date: 8/10/16
Scale: AS NOTED

NGG Project No.
5-2013

Drawing Title
COVER

Drawn By: IY
Sheet No.: 001

PROVIDE SHOP DRAWING OF TYPICAL BRAKE METAL CAP & THE UNIQUE CAP AT THIS LOCATION. COORDINATE TRANSITION BETWEEN THEM.

1 ENLARGED DETAIL @ SSG CURTAINWALL SILL & WA-L2
3" = 1'-0"

COORDINATE EXISTING CONDISIONS. CONCRETE WALL IS 1" OUT FROM CONSTRUCTION DOCUMENTS. CURTAIN WALL SHOULD BE INSTALLED 1'-10" FROM COLUMN LINE TO FACE OF GLASS. FLASHING BELOOW WILL NEED TO BE MODIFIED PER DISCUSSION AT MEETING.

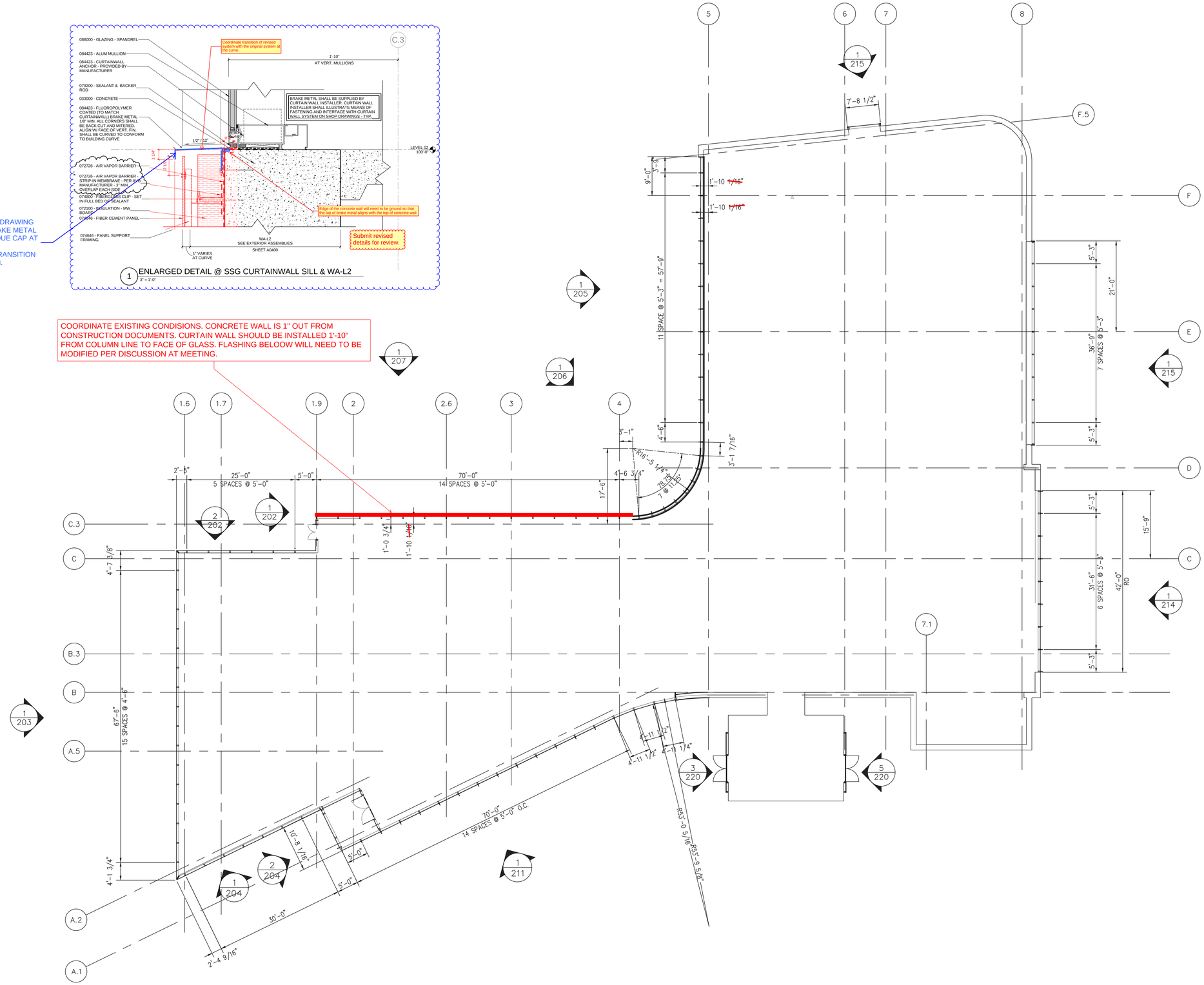

1 LEVEL 2 PLAN
Scale: 3/32"=1'-0"

NGG LTD

NGG LTD, INCORPORATED
1850 Craigshire Road Suite 202
St. Louis, Missouri 63146

Tel 314-336-2515
Fax 314-336-2521

Professional Seal

Sub. No.	Rev. No.	Date	Drawn By	Submittal/Revision Description
3	1	11/8/16	IY	3RD SUBMISSION
1	–	10/19/16	IY	2ND SUBMISSION

Proprietary Notice

This drawing sheet and contents herein are property of NGG. Use of this drawing, contents or design concepts for purposes other than estimating, drawing preparation and/or manufacturing for NGG shall be cause for legal recourse by NGG.

Project Name
WEBSTER UNIVERSITY
Location
St. Louis, Missouri

Architect
CANNON DESIGN
Location
St. Louis, Missouri

Contractor
PARIC
Location
St. Louis, Missouri

Owner
WEBSTER UNIVERSITY
Location
St. Louis, Missouri

Drawn Date	Scale
01/02/14	AS NOTED

NGG Project No.

Drawing Title
EMBED TITLE SHEET

Drawn By	Sheet No.
IY	102

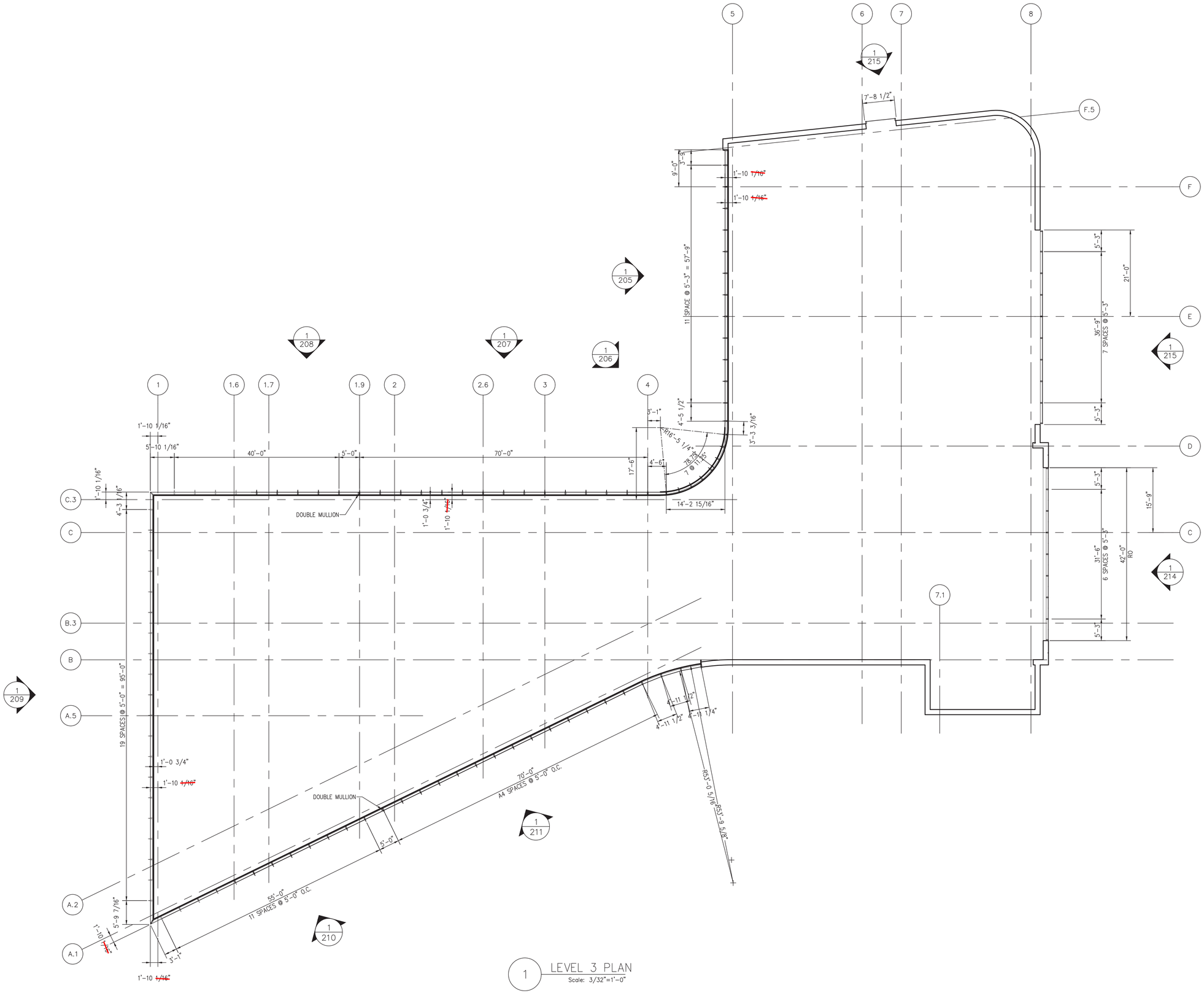

1 LEVEL 3 PLAN
Scale: 3/32"=1'-0"

NGG LTD

NGG LTD, INCORPORATED
1850 Craigshire Road Suite 202
St. Louis, Missouri 63146

Tel 314-336-2515
Fax 314-336-2521

Professional Seal

Sub. No.	Rev. No.	Date	Drawn By	Submittal/Revision Description
3	1	11/8/16	IY	3RD SUBMISSION
1	–	10/19/16	IY	2ND SUBMISSION

Proprietary Notice

This drawing sheet and contents herein are property of NGG. Use of this drawing, contents or design concepts for purposes other than estimating, drawing preparation and/or manufacturing for NGG shall be cause for legal recourse by NGG.

Project Name
WEBSTER UNIVERSITY
Location
St. Louis, Missouri

Architect
CANNON DESIGN
Location
St. Louis, Missouri

Contractor
PARIC
Location
St. Louis, Missouri

Owner
WEBSTER UNIVERSITY
Location
St. Louis, Missouri

Drawn Date	Scale
01/02/14	AS NOTED

NGG Project No.

Drawing Title
EMBED TITLE SHEET

Drawn By	Sheet No.
IY	103

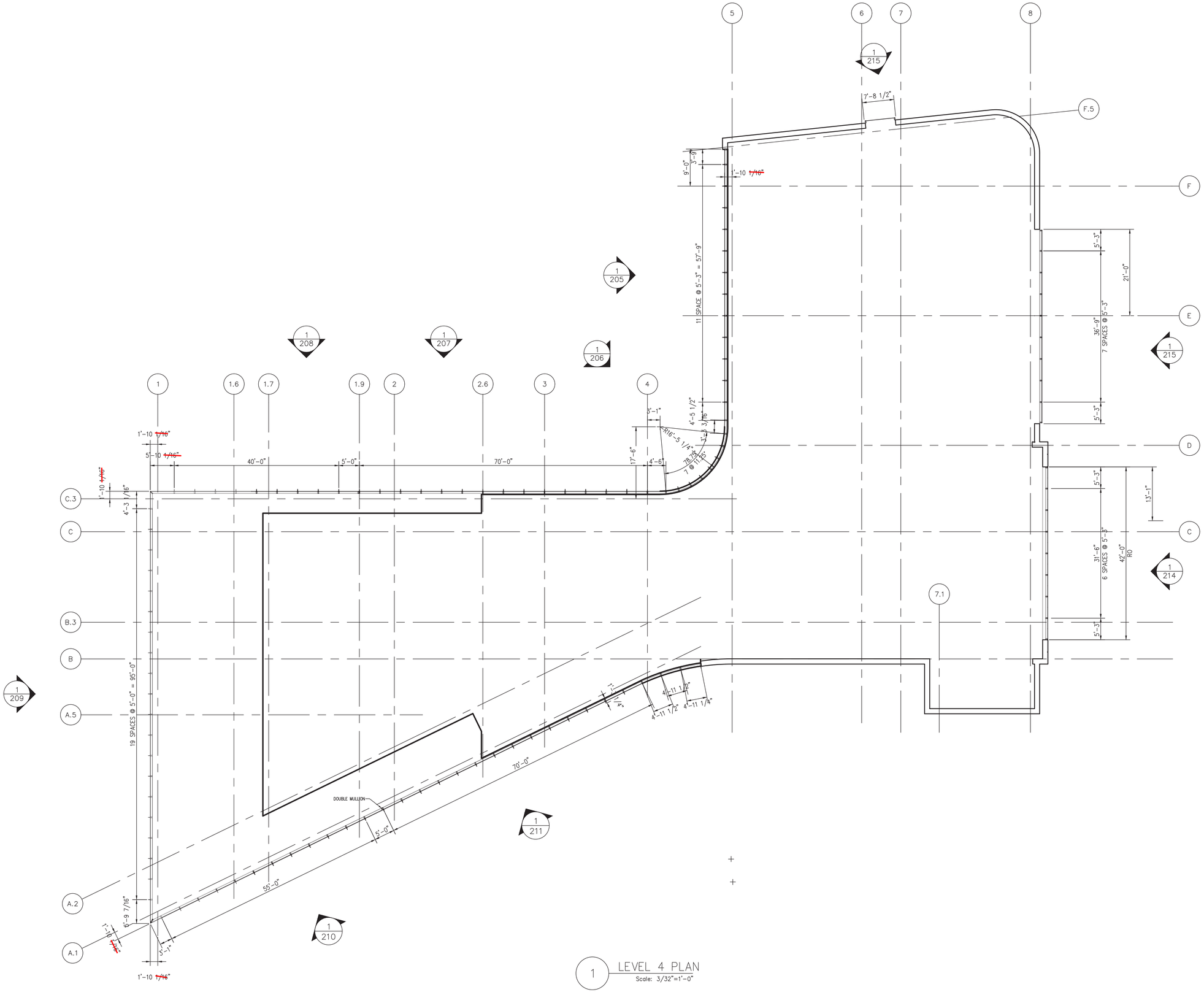

1 LEVEL 4 PLAN
Scale: 3/32"=1'-0"

NGG LTD

NGG LTD, INCORPORATED
1850 Craigshire Road Suite 202
St. Louis, Missouri 63146

Tel 314-336-2515
Fax 314-336-2521

Professional Seal

Sub. No.	Rev. No.	Date	Drawn By	Submitted/Revision Description
3	1	11/8/16	IY	3RD SUBMISSION
1	–	10/19/16	IY	2ND SUBMISSION

Proprietary Notice

This drawing sheet and contents herein are property of NGG. Use of this drawing, contents or design concepts for purposes other than estimating, drawing preparation and/or manufacturing for NGG shall be cause for legal recourse by NGG.

Project Name
WEBSTER UNIVERSITY
Location
St. Louis, Missouri

Architect
CANNON DESIGN
Location
St. Louis, Missouri

Contractor
PARIC
Location
St. Louis, Missouri

Owner
WEBSTER UNIVERSITY
Location
St. Louis, Missouri

Drawn Date	Scale
01/02/14	AS NOTED

NGG Project No.

Drawing Title
EMBED TITLE SHEET

Drawn By	Sheet No.
IY	104

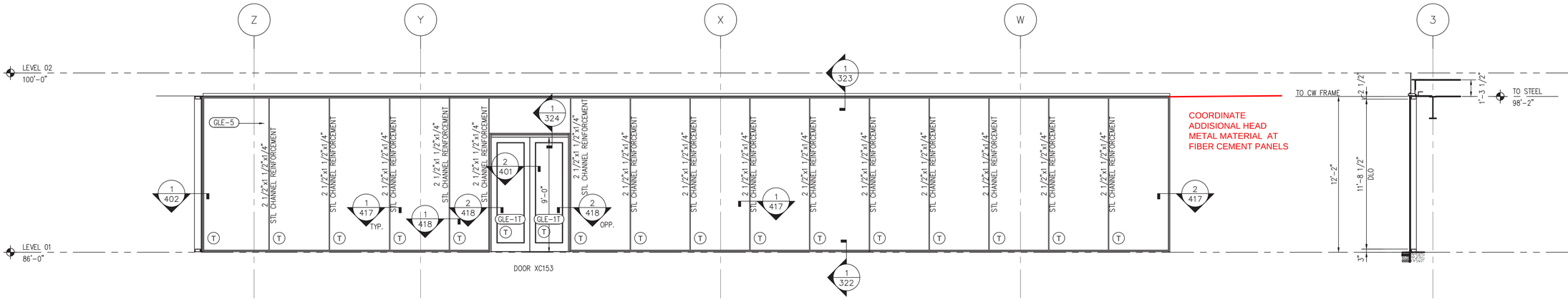

1 SOUTH ~~WEST~~ ELEVATION
Scale: 3/4"=1'-0"
EGS-2A
COLOR: BLACK

3 SECTION
Scale: 3/4"=1'-0"

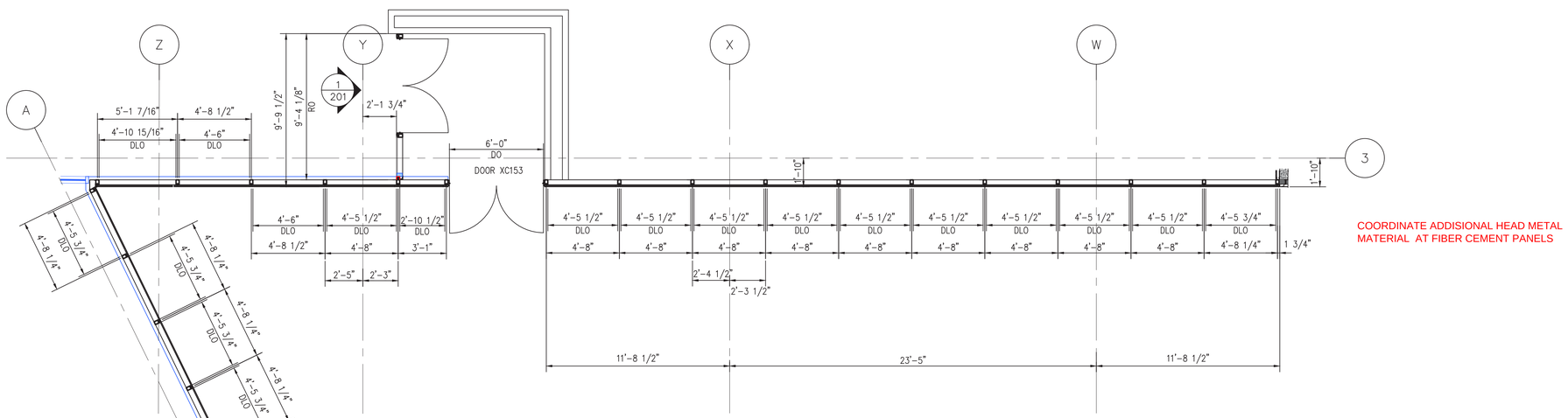

2 PLAN
Scale: 3/4"=1'-0"

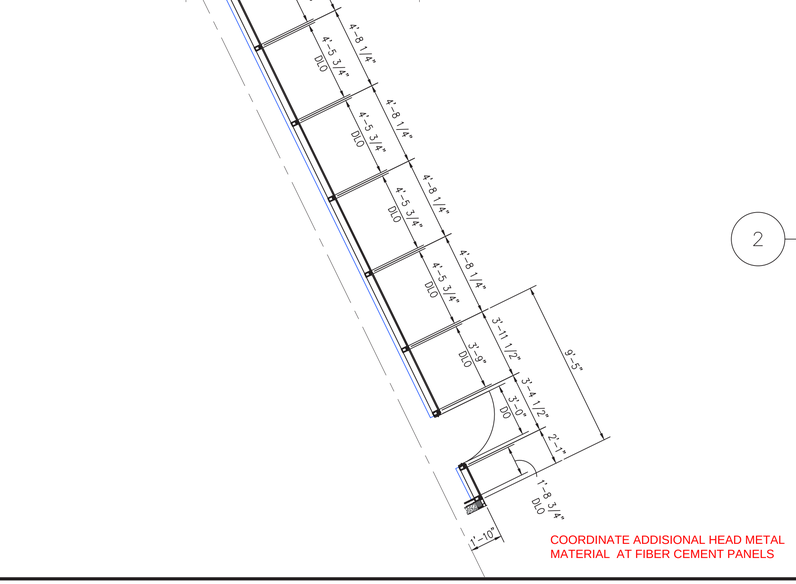

NGG LTD

NGG LTD, INCORPORATED
1850 Craigshire Road Suite 202
St. Louis, Missouri 63146

Tel 314-336-2515
Fax 314-336-2521

Professional Seal

Sub. No.	Rev. No.	Date	Drawn By	Submitted/Revision Description
3	2	11/8/16	IY	3RD SUBMISSION
2	1	10/19/16	IY	2ND SUBMISSION
1	–	8/10/16	IY	1ST SUBMISSION

Proprietary Notice

This drawing sheet and contents herein are property of NGG. Use of this drawing, contents or design concepts for purposes other than estimating, drawing preparation and/or manufacturing for NGG shall be cause for legal recourse by NGG.

Project Name
WEBSTER UNIVERSITY
Location
St. Louis, Missouri

Architect
CANNON DESIGN
Location
St. Louis, Missouri

Contractor
PARIC
Location
St. Louis, Missouri

Owner
WEBSTER UNIVERSITY
Location
St. Louis, Missouri

Drawn Date	Scale
08/10/16	AS NOTED

NGG Project No.

Drawing Title
EMBED TITLE SHEET

Drawn By	Sheet No.
IY	200

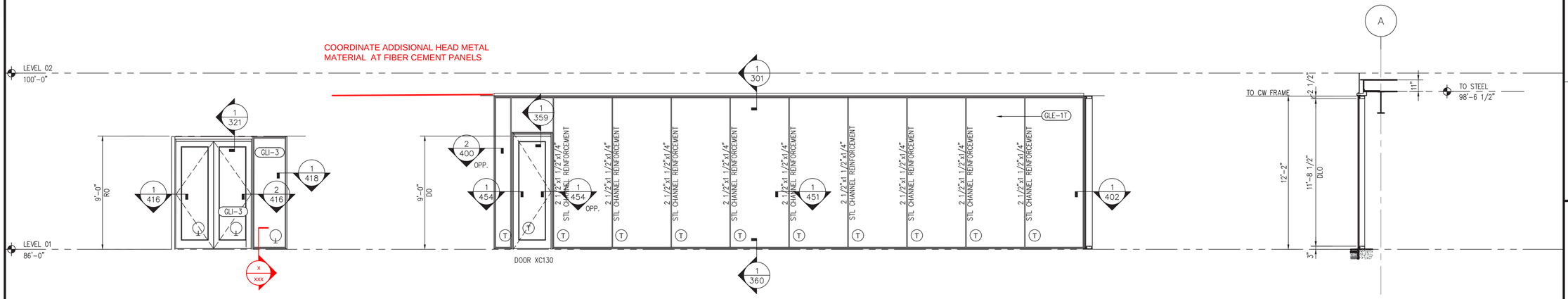

1 INTERIOR VESTIBULE
Scale: 3/4"=1'-0"
EGS-2
COLOR: BLACK

1 WEST ELEVATION
Scale: 3/4"=1'-0"
EGS-2A
COLOR: BLACK

3 SECTION
Scale: 3/4"=1'-0"

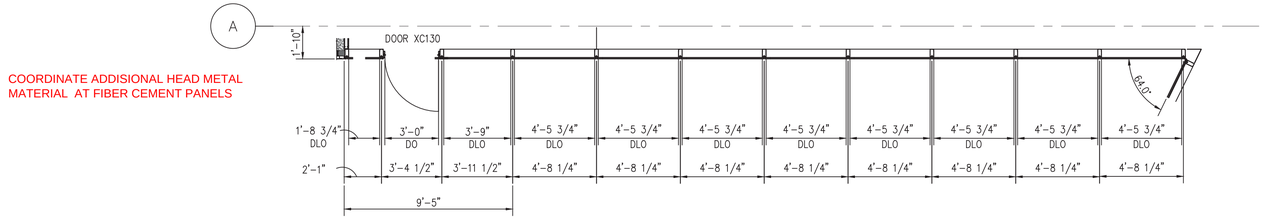

2 PLAN
Scale: 3/4"=1'-0"

NGG LTD

NGG LTD, INCORPORATED
1850 Craigshire Road Suite 202
St. Louis, Missouri 63146

Tel 314-336-2515
Fax 314-336-2521

Professional Seal

Sub. No.	Rev. No.	Date	Drawn By	Submitted/Revision Description
3	2	11/8/16	IY	3RD SUBMISSION
2	1	10/19/16	IY	2ND SUBMISSION
1	–	8/10/16	IY	1ST SUBMISSION

Proprietary Notice

This drawing sheet and contents herein are property of NGG. Use of this drawing, contents or design concepts for purposes other than estimating, drawing preparation and/or manufacturing for NGG shall be cause for legal recourse by NGG.

Project Name
WEBSTER UNIVERSITY
Location
St. Louis, Missouri

Architect
CANNON DESIGN
Location
St. Louis, Missouri

Contractor
PARIC
Location
St. Louis, Missouri

Owner
WEBSTER UNIVERSITY
Location
St. Louis, Missouri

Drawn Date	Scale
08/10/16	AS NOTED

NGG Project No.

Drawing Title
EMBED TITLE SHEET

Drawn By	Sheet No.
IY	201

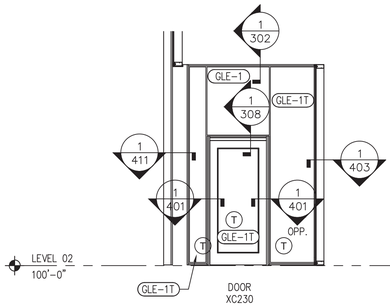

1 WEST ELEVATION
Scale: 3/4"=1'-0"
EGS-2
COLOR: PEWTER

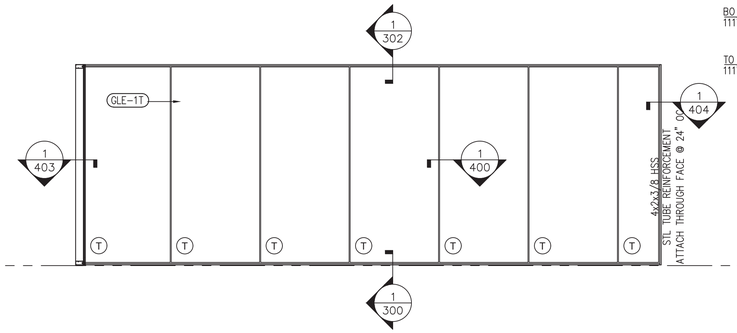

2 NORTH ELEVATION
Scale: 3/4"=1'-0"
EGS-2
COLOR: PEWTER

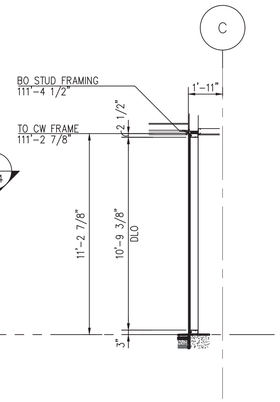

3 SECTION
Scale: 3/4"=1'-0"

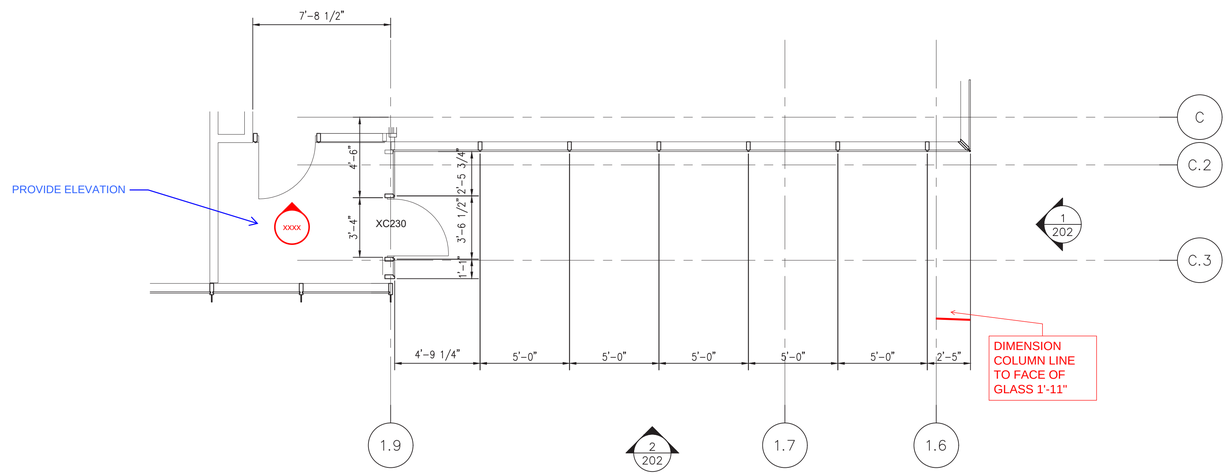

4 PLAN
Scale: 3/4"=1'-0"

NGG LTD

NGG LTD, INCORPORATED
1850 Craigshire Road Suite 202
St. Louis, Missouri 63146

Tel 314-336-2515
Fax 314-336-2521

Professional Seal

Sub. No.	Rev. No.	Date	Drawn By	Submitted/Revision Description
3	2	11/8/16	IY	3RD SUBMISSION
2	1	10/19/16	IY	2ND SUBMISSION
1	–	8/10/16	IY	1ST SUBMISSION

Proprietary Notice

This drawing sheet and contents herein are property of NGG. Use of this drawing, contents or design concepts for purposes other than estimating, drawing preparation and/or manufacturing for NGG shall be cause for legal recourse by NGG.

Project Name
WEBSTER UNIVERSITY
Location
St. Louis, Missouri

Architect
CANNON DESIGN
Location
St. Louis, Missouri

Contractor
PARIC
Location
St. Louis, Missouri

Owner
WEBSTER UNIVERSITY
Location
St. Louis, Missouri

Drawn Date	Scale
08/10/16	AS NOTED

NGG Project No.

Drawing Title
EMBED TITLE SHEET

Drawn By	Sheet No.
IY	202

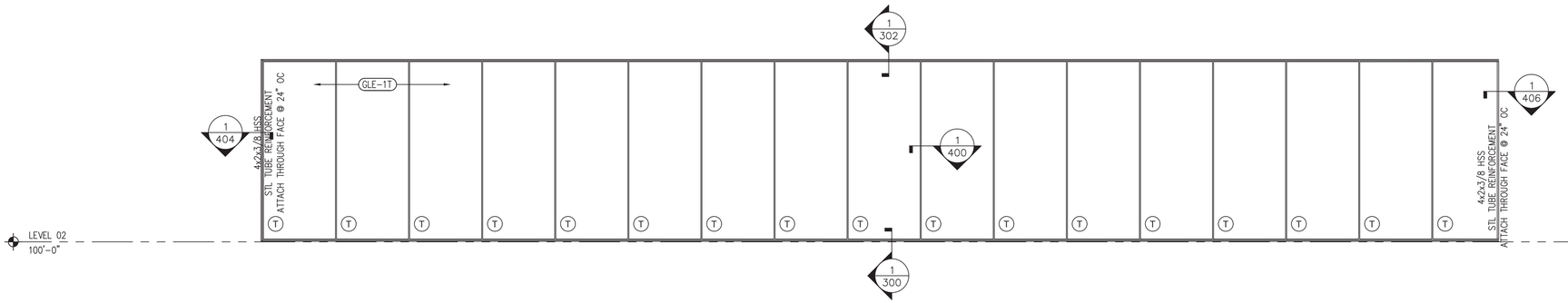

1 WEST ELEVATION
Scale: 3/4"=1'-0"
EGS-2
COLOR: PEWTER

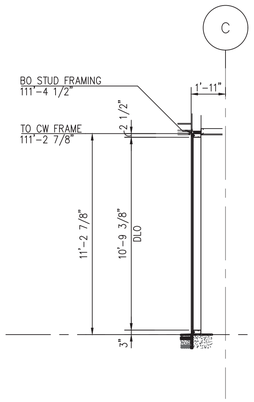

3 SECTION
Scale: 3/4"=1'-0"

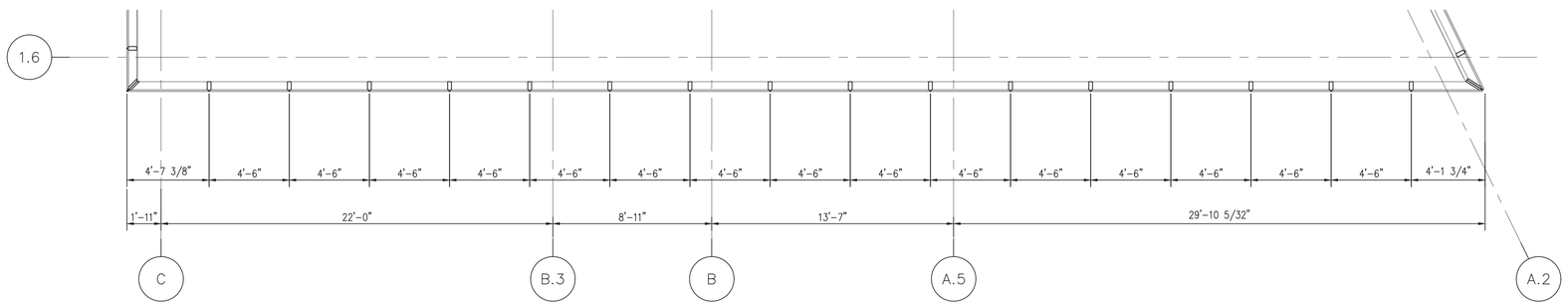

2 PLAN
Scale: 3/4"=1'-0"

NGG LTD

NGG LTD, INCORPORATED
1850 Craigshire Road Suite 202
St. Louis, Missouri 63146

Tel 314-336-2515
Fax 314-336-2521

Professional Seal

Sub. No.	Rev. No.	Date	Drawn By	Submitted/Revision Description
3	2	11/8/16	IY	3RD SUBMISSION
2	1	10/19/16	IY	2ND SUBMISSION
1	–	8/10/16	IY	1ST SUBMISSION

Proprietary Notice

This drawing sheet and contents herein are property of NGG. Use of this drawing, contents or design concepts for purposes other than estimating, drawing preparation and/or manufacturing for NGG shall be cause for legal recourse by NGG.

Project Name
WEBSTER UNIVERSITY
Location
St. Louis, Missouri

Architect
CANNON DESIGN
Location
St. Louis, Missouri

Contractor
PARIC
Location
St. Louis, Missouri

Owner
WEBSTER UNIVERSITY
Location
St. Louis, Missouri

Drawn Date	Scale
08/10/16	AS NOTED

NGG Project No.

Drawing Title
EMBED TITLE SHEET

Drawn By	Sheet No.
IY	203

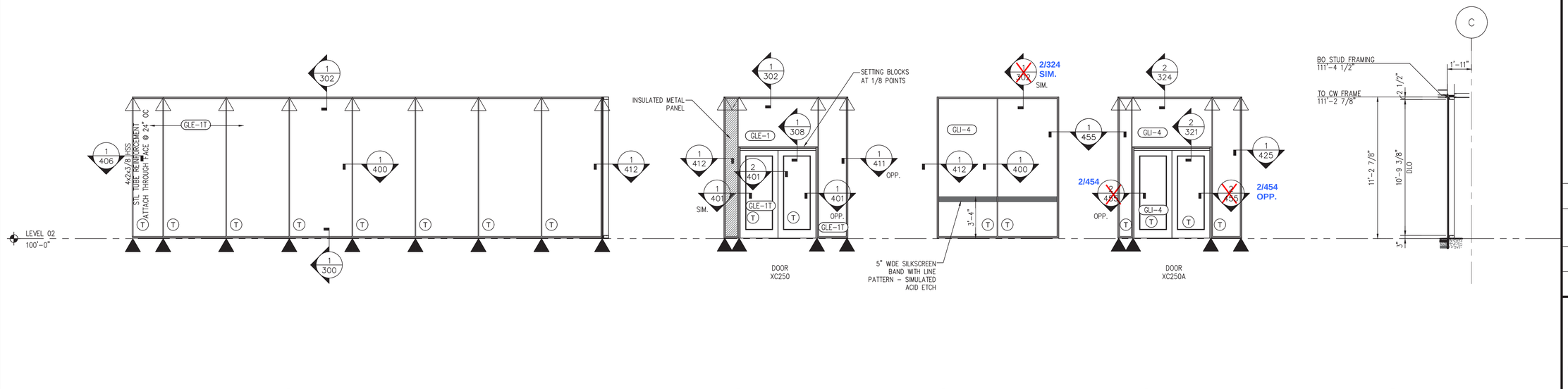

1 SOUTH ELEVATION
Scale: 3/4"=1'-0"
EGS-2
COLOR: PEWTER

2 WEST ELEVATION
Scale: 3/4"=1'-0"
EGS-2
COLOR: PEWTER

3 INTERIOR VESTIBULE
Scale: 3/4"=1'-0"
EGS-2
COLOR: PEWTER

4 INTERIOR VESTIBULE
Scale: 3/4"=1'-0"
EGS-2
COLOR: PEWTER

5 SECTION
Scale: 3/4"=1'-0"

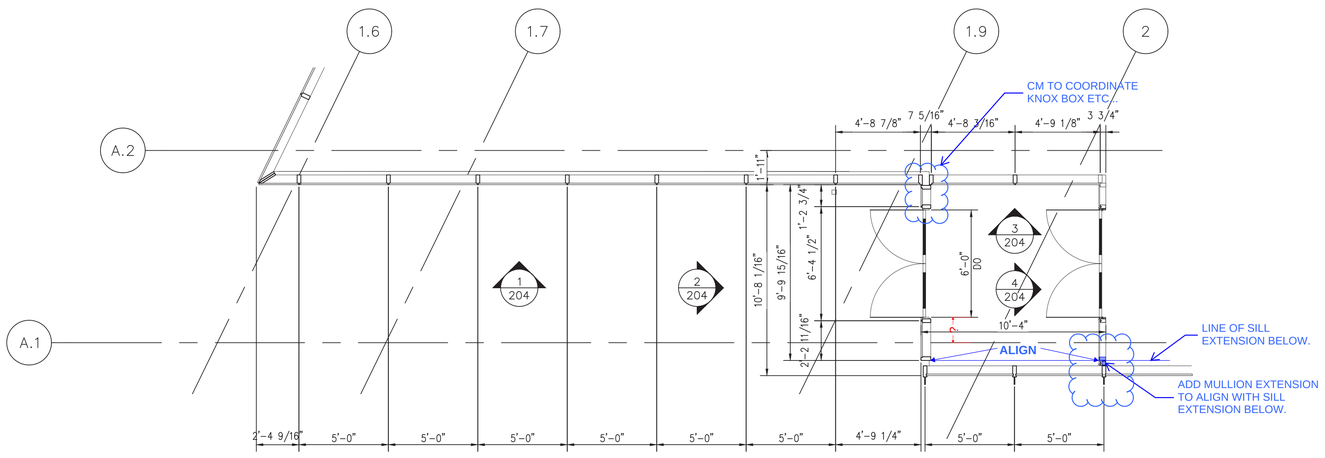

3 PLAN
Scale: 3/4"=1'-0"

NGG LTD

NGG LTD, INCORPORATED
1850 Craigshire Road Suite 202
St. Louis, Missouri 63146

Tel 314-336-2515
Fax 314-336-2521

Professional Seal

Sub. No.	Rev. No.	Date	Drawn By	Submitted/Revision Description
3	2	11/8/16	IY	3RD SUBMISSION
2	1	10/19/16	IY	2ND SUBMISSION
1	–	8/10/16	IY	1ST SUBMISSION

Proprietary Notice

This drawing sheet and contents herein are property of NGG. Use of this drawing, contents or design concepts for purposes other than estimating, drawing preparation and/or manufacturing for NGG shall be cause for legal recourse by NGG.

Project Name
WEBSTER UNIVERSITY
Location
St. Louis, Missouri

Architect
CANNON DESIGN
Location
St. Louis, Missouri

Contractor
PARIC
Location
St. Louis, Missouri

Owner
WEBSTER UNIVERSITY
Location
St. Louis, Missouri

Drawn Date	Scale
08/10/16	AS NOTED

NGG Project No.

Drawing Title
EMBED TITLE SHEET

Drawn By	Sheet No.
IY	204

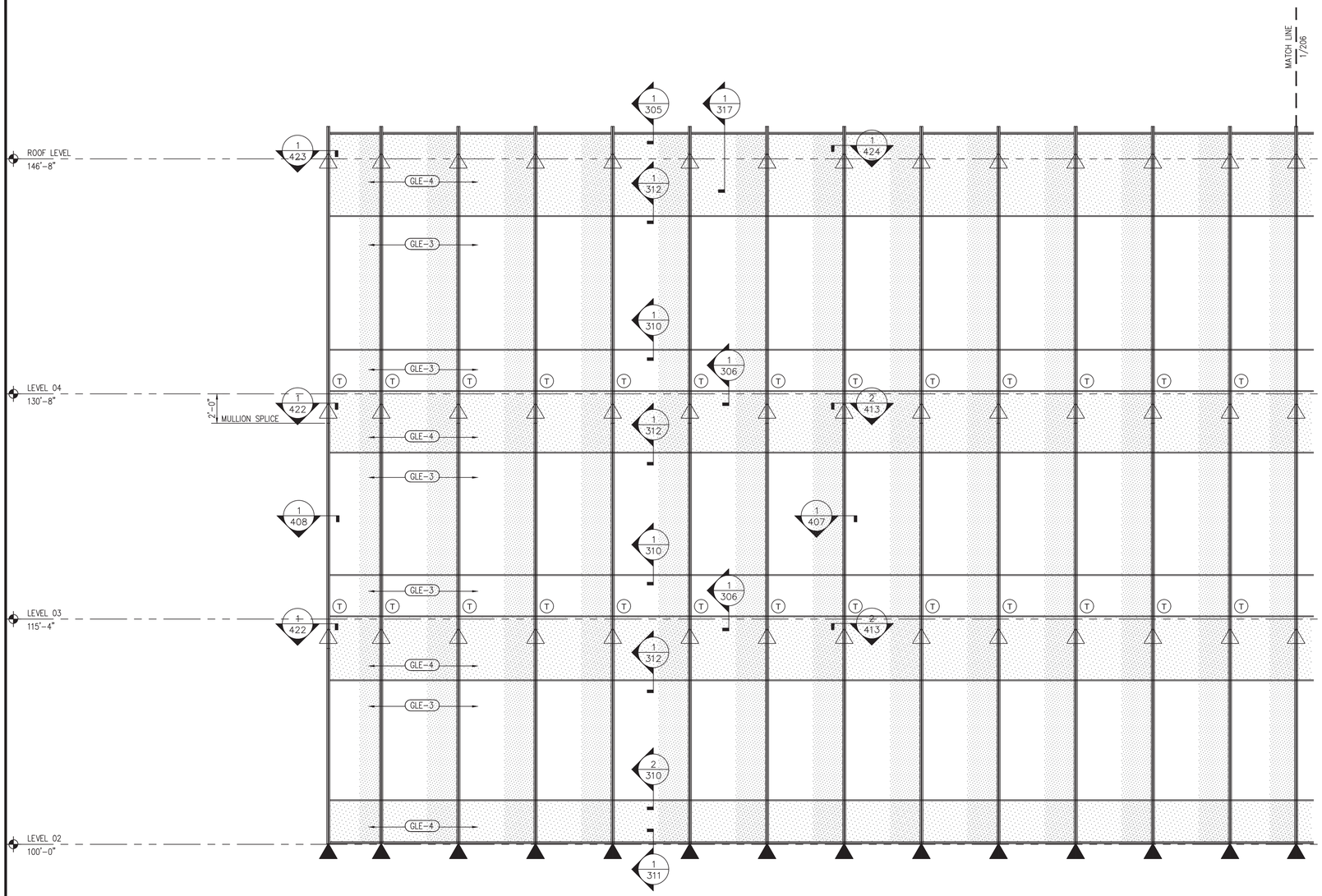

1 WEST ELEVATION

Scale: 3/4"=1'-0"

EGS-1
COLOR: PEWTER

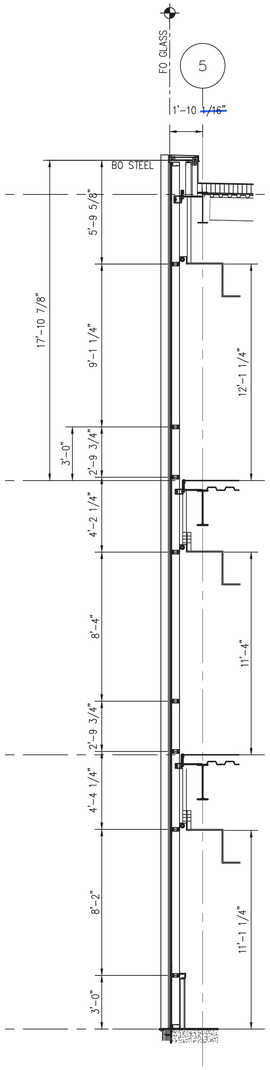

3 SECTION

Scale: 3/4"=1'-0"

ARCH REF: 1/A0402

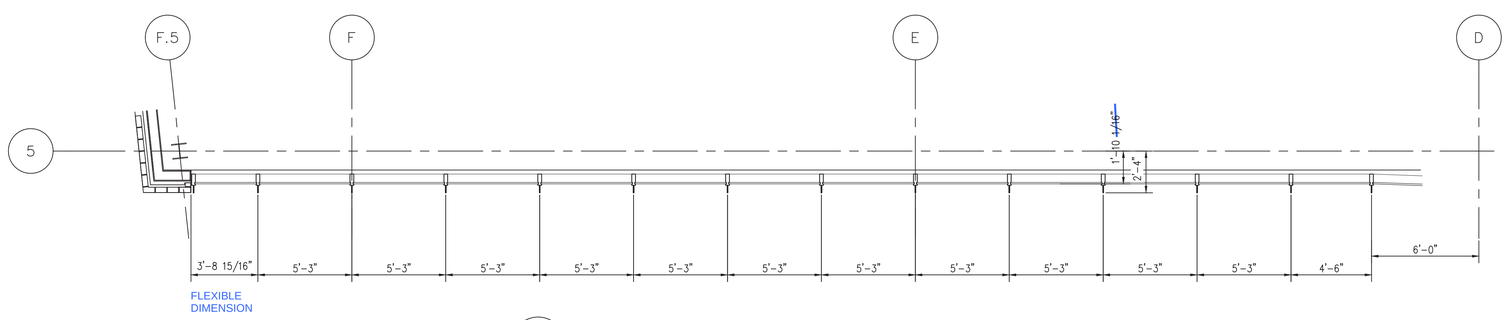

2 PLAN

Scale: 3/4"=1'-0"

NGG LTD

NGG LTD, INCORPORATED
1850 Craigshire Road Suite 202
St. Louis, Missouri 63146

Tel 314-336-2515
Fax 314-336-2521

Professional Seal

Sub. No.	Rev. No.	Date	Drawn By	Submitted/Revision Description
3	2	11/8/16	IY	3RD SUBMISSION
2	1	10/19/16	IY	2ND SUBMISSION
1	–	8/10/16	IY	1ST SUBMISSION

Proprietary Notice

This drawing sheet and contents herein are property of NGG. Use of this drawing, contents or design concepts for purposes other than estimating, drawing preparation and/or manufacturing for NGG shall be cause for legal recourse by NGG.

Project Name
WEBSTER UNIVERSITY
Location
St. Louis, Missouri

Architect
CANNON DESIGN
Location
St. Louis, Missouri

Contractor
PARIC
Location
St. Louis, Missouri

Owner
WEBSTER UNIVERSITY
Location
St. Louis, Missouri

Drawn Date	Scale
08/10/16	AS NOTED

NGG Project No.

Drawing Title
EMBED TITLE SHEET

Drawn By	Sheet No.
IY	205

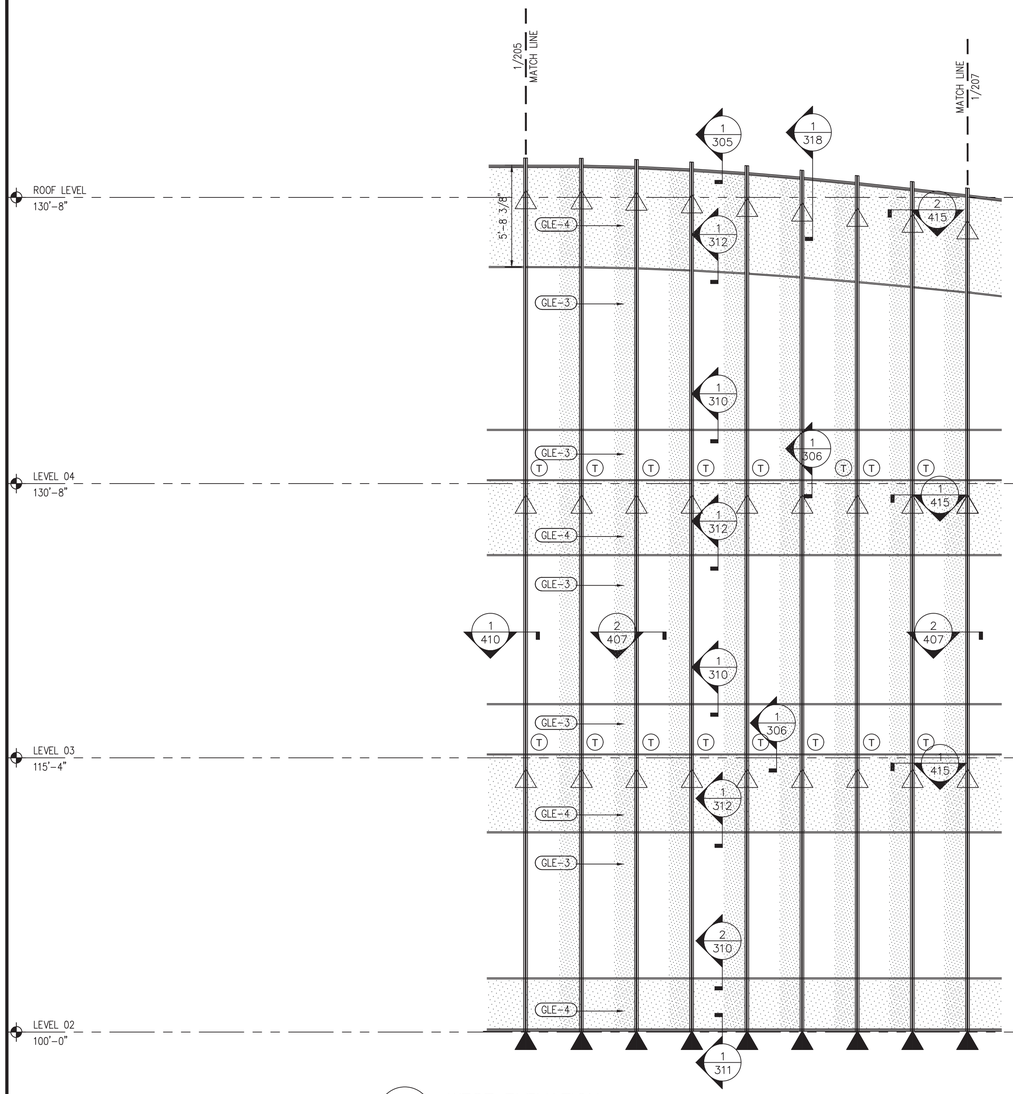

1 WEST ELEVATION

Scale: 3/4"=1'-0"

EGS-1
COLOR: PEWTER

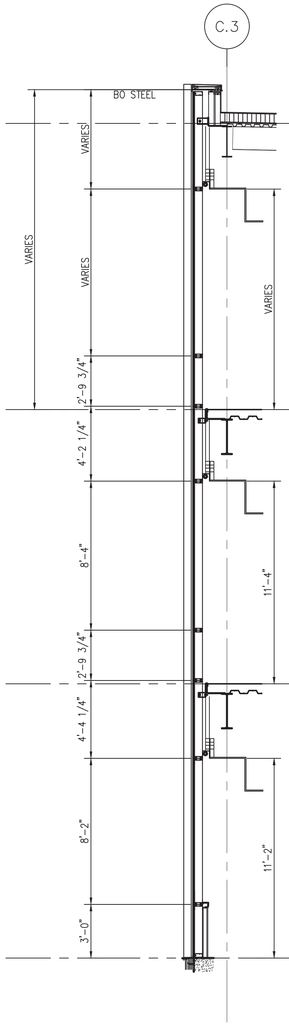

3 SECTION

Scale: 3/4"=1'-0"

ARCH REF: 3/A0401

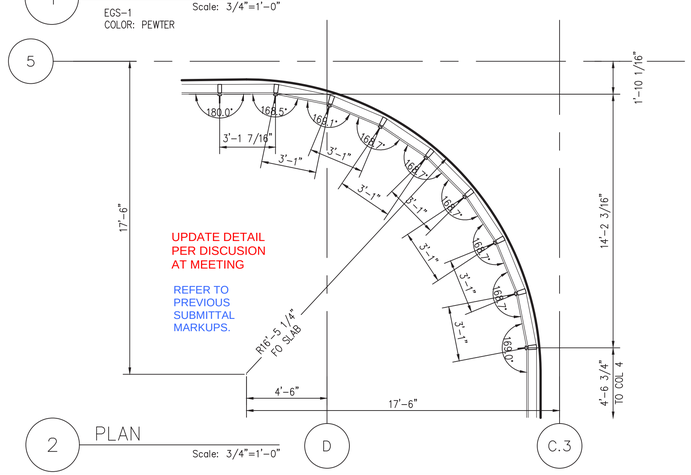

2 PLAN

Scale: 3/4"=1'-0"

NGG LTD

NGG LTD, INCORPORATED
1850 Craigshire Road Suite 202
St. Louis, Missouri 63146

Tel 314-336-2515
Fax 314-336-2521

Professional Seal

Sub. No.	Rev. No.	Date	Drawn By	Submitted/Revision Description
3	2	11/8/16	IY	3RD SUBMISSION
2	1	10/19/16	IY	2ND SUBMISSION
1	–	8/10/16	IY	1ST SUBMISSION

Proprietary Notice

This drawing sheet and contents herein are property of NGG. Use of this drawing, contents or design concepts for purposes other than estimating, drawing preparation and/or manufacturing for NGG shall be cause for legal recourse by NGG.

Project Name
WEBSTER UNIVERSITY
Location
St. Louis, Missouri

Architect
CANNON DESIGN
Location
St. Louis, Missouri

Contractor
PARIC
Location
St. Louis, Missouri

Owner
WEBSTER UNIVERSITY
Location
St. Louis, Missouri

Drawn Date	Scale
08/10/16	AS NOTED

NGG Project No.

Drawing Title
EMBED TITLE SHEET

Drawn By	Sheet No.
IY	206

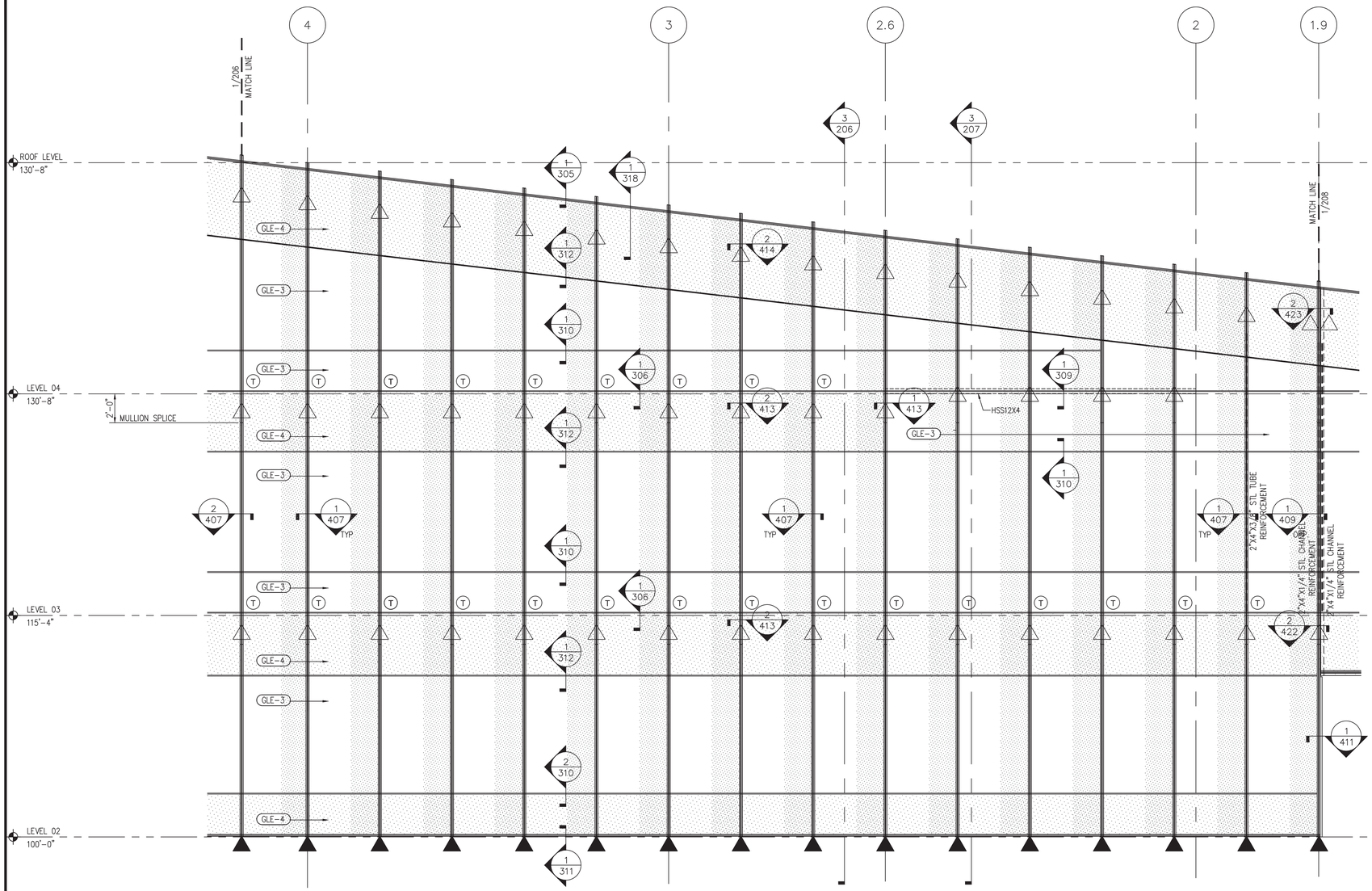

1 NORTH ELEVATION

Scale: 3/4"=1'-0"

EGS-1
COLOR: PEWTER

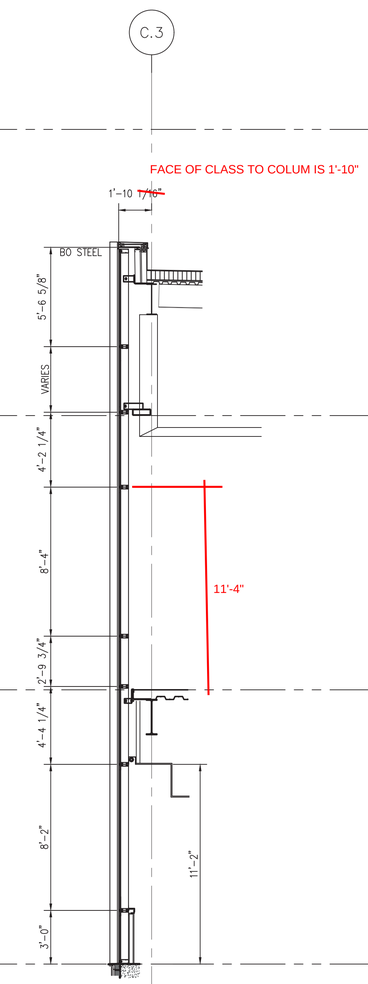

3 SECTION

Scale: 3/4"=1'-0"

ARCH REF: 2/A0401

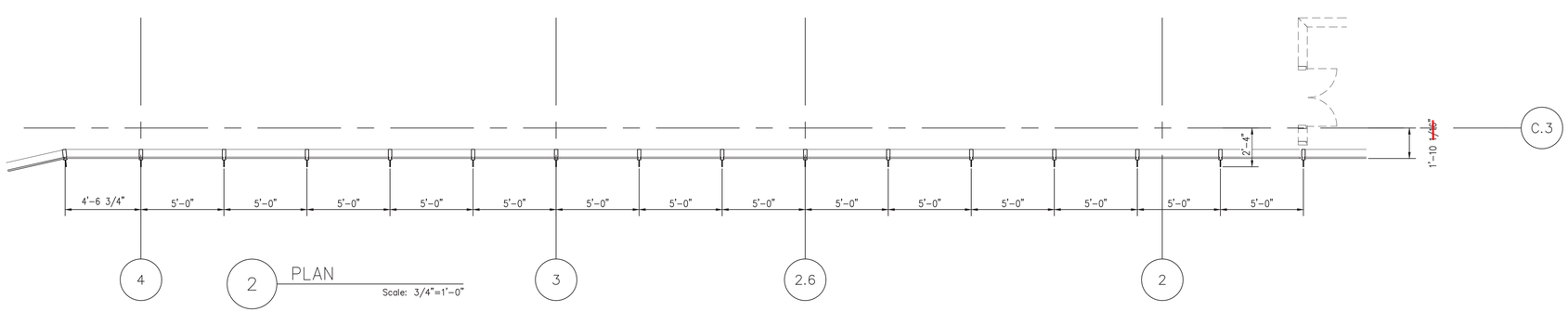

2 PLAN

Scale: 3/4"=1'-0"

NGG LTD

NGG LTD, INCORPORATED
1850 Craigshire Road Suite 202
St. Louis, Missouri 63146

Tel 314-336-2515
Fax 314-336-2521

Professional Seal

Sub. No.	Rev. No.	Date	Drawn By	Submitted/Revision Description
3	2	11/8/16	IY	3RD SUBMISSION
2	1	10/19/16	IY	2ND SUBMISSION
1	–	8/10/16	IY	1ST SUBMISSION

Proprietary Notice

This drawing sheet and contents herein are property of NGG. Use of this drawing, contents or design concepts for purposes other than estimating, drawing preparation and/or manufacturing for NGG shall be cause for legal recourse by NGG.

Project Name
WEBSTER UNIVERSITY
Location
St. Louis, Missouri

Architect
CANNON DESIGN
Location
St. Louis, Missouri

Contractor
PARIC
Location
St. Louis, Missouri

Owner
WEBSTER UNIVERSITY
Location
St. Louis, Missouri

Drawn Date	Scale
08/10/16	AS NOTED

NGG Project No.

Drawing Title
EMBED TITLE SHEET

Drawn By	Sheet No.
IY	207

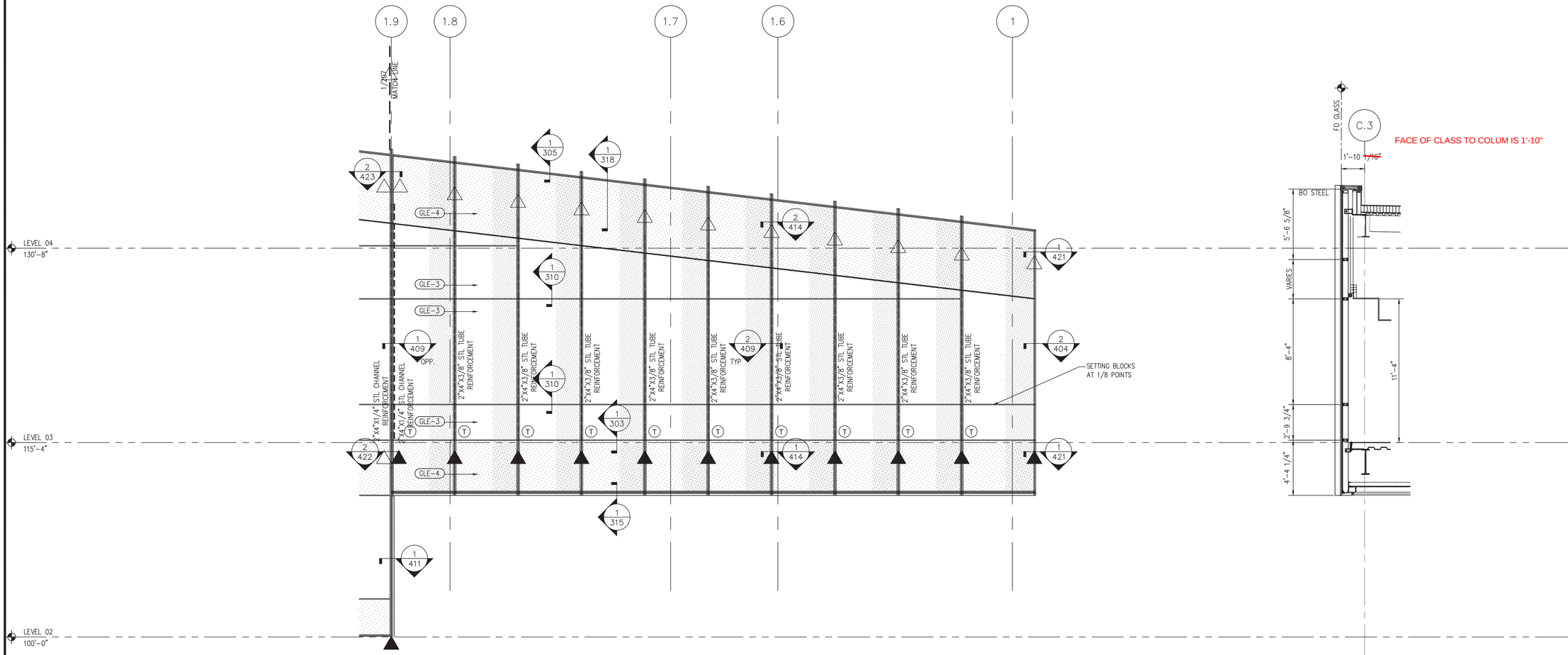

1 NORTH ELEVATION
Scale: 3/4"=1'-0"
EGS-1
COLOR: PEWTER

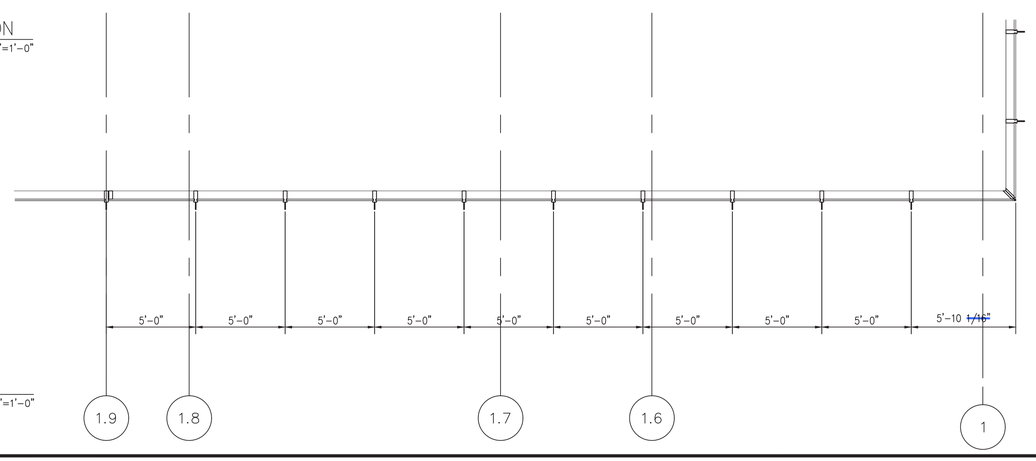

2 PLAN
Scale: 3/4"=1'-0"

3 SECTION
Scale: 3/4"=1'-0"
ARCH REF: 1/A0401

NGG LTD

NGG LTD, INCORPORATED
1850 Craigshire Road Suite 202
St. Louis, Missouri 63146

Tel 314-336-2515
Fax 314-336-2521

Professional Seal

Sub. No.	Rev. No.	Date	Drawn By	Submitted/Revision Description
3	2	11/8/16	IY	3RD SUBMISSION
2	1	10/19/16	IY	2ND SUBMISSION
1	–	8/10/16	IY	1ST SUBMISSION

Proprietary Notice

This drawing sheet and contents herein are property of NGG. Use of this drawing, contents or design concepts for purposes other than estimating, drawing preparation and/or manufacturing for NGG shall be cause for legal recourse by NGG.

Project Name
WEBSTER UNIVERSITY
Location
St. Louis, Missouri

Architect
CANNON DESIGN
Location
St. Louis, Missouri

Contractor
PARIC
Location
St. Louis, Missouri

Owner
WEBSTER UNIVERSITY
Location
St. Louis, Missouri

Drawn Date	Scale
08/10/16	AS NOTED

NGG Project No.

Drawing Title
EMBED TITLE SHEET

Drawn By	Sheet No.
IY	208

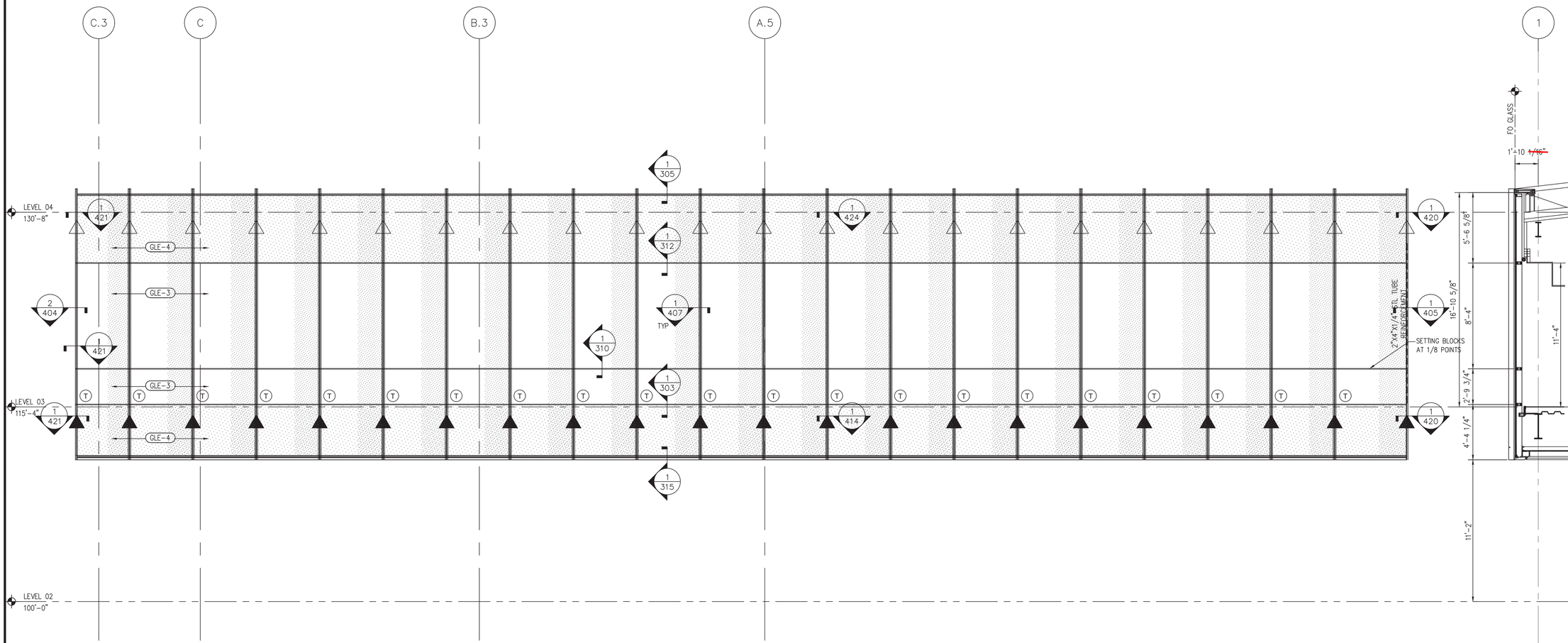

3 SECTION
Scale: 3/4"=1'-0"
ARCH REF: 1/A0406

1 WEST ELEVATION
Scale: 3/4"=1'-0"
EGS-1
COLOR: PEWTER

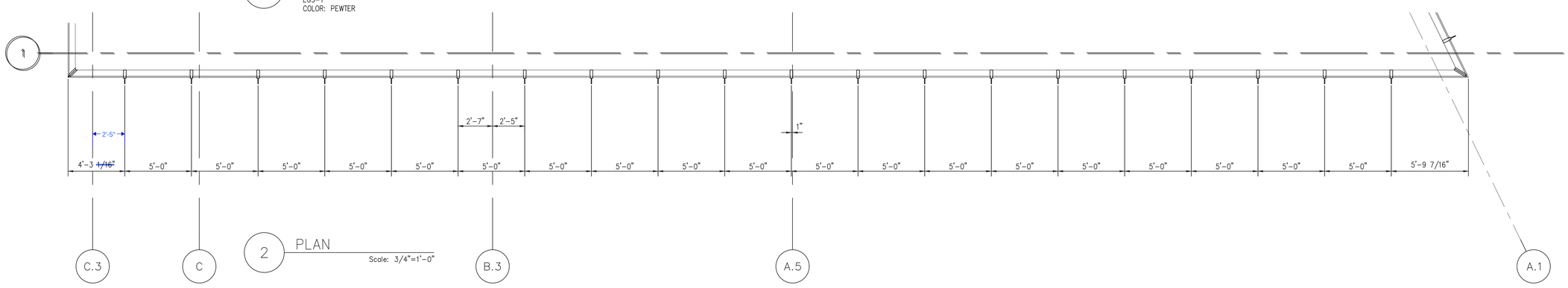

2 PLAN
Scale: 3/4"=1'-0"

NGG LTD

NGG LTD, INCORPORATED
1850 Craigshire Road Suite 202
St. Louis, Missouri 63146

Tel 314-336-2515
Fax 314-336-2521

Professional Seal

Sub. No.	Rev. No.	Date	Drawn By	Submitted/Revision Description
3	2	11/8/16	IY	3RD SUBMISSION
2	1	10/19/16	IY	2ND SUBMISSION
1	–	8/10/16	IY	1ST SUBMISSION

Proprietary Notice

This drawing sheet and contents herein are property of NGG. Use of this drawing, contents or design concepts for purposes other than estimating, drawing preparation and/or manufacturing for NGG shall be cause for legal recourse by NGG.

Project Name
WEBSTER UNIVERSITY
Location
St. Louis, Missouri

Architect
CANNON DESIGN
Location
St. Louis, Missouri

Contractor
PARIC
Location
St. Louis, Missouri

Owner
WEBSTER UNIVERSITY
Location
St. Louis, Missouri

Drawn Date	Scale
08/10/16	AS NOTED

NGG Project No.

Drawing Title
EMBED TITLE SHEET

Drawn By	Sheet No.
IY	209

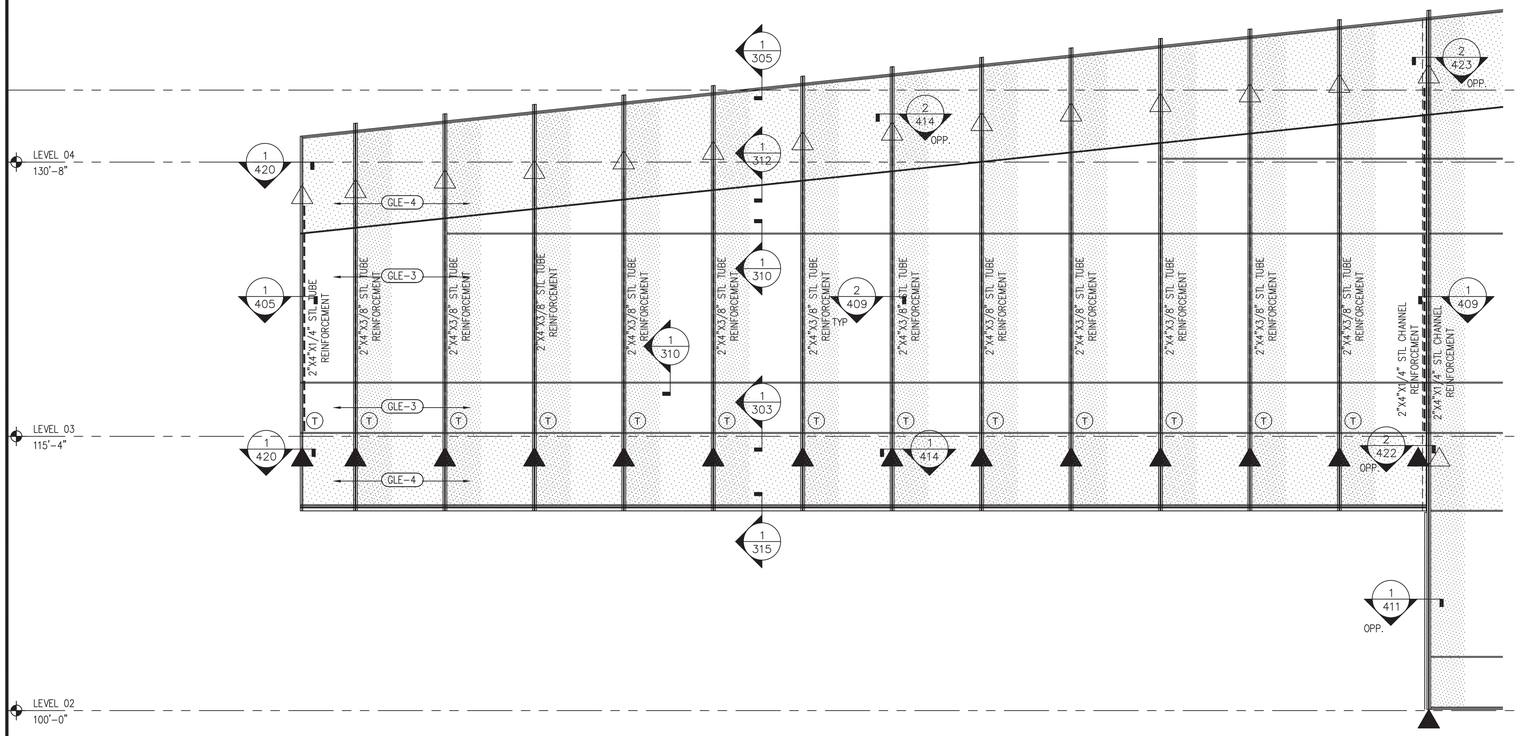

1 SOUTH ELEVATION
Scale: 3/4"=1'-0"
EGS-1
COLOR: PEWTER

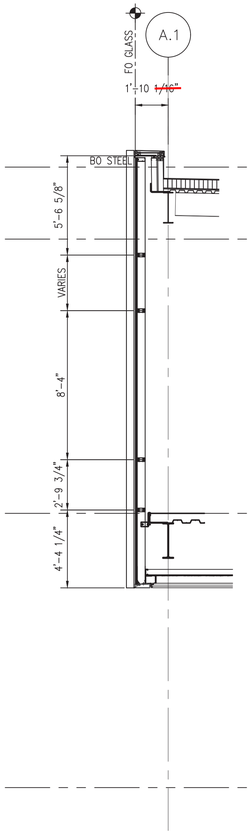

3 SECTION
Scale: 3/4"=1'-0"
ARCH REF: 1/A0405

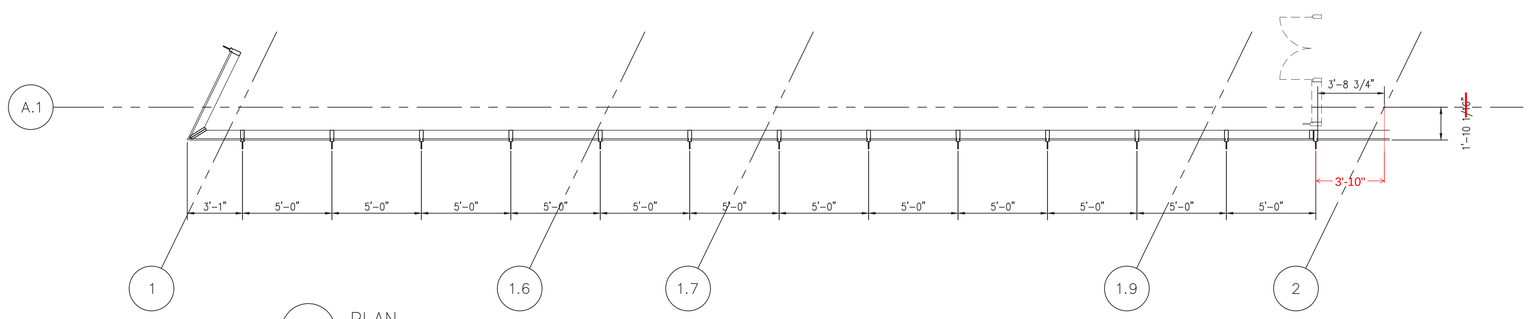

2 PLAN
Scale: 3/4"=1'-0"

NGG LTD

NGG LTD, INCORPORATED
1850 Craigshire Road Suite 202
St. Louis, Missouri 63146

Tel 314-336-2515
Fax 314-336-2521

Professional Seal

Sub. No.	Rev. No.	Date	Drawn By	Submitted/Revision Description
3	2	11/8/16	IY	3RD SUBMISSION
2	1	10/19/16	IY	2ND SUBMISSION
1	–	8/10/16	IY	1ST SUBMISSION

Proprietary Notice

This drawing sheet and contents herein are property of NGG. Use of this drawing, contents or design concepts for purposes other than estimating, drawing preparation and/or manufacturing for NGG shall be cause for legal recourse by NGG.

Project Name
WEBSTER UNIVERSITY
Location
St. Louis, Missouri

Architect
CANNON DESIGN
Location
St. Louis, Missouri

Contractor
PARIC
Location
St. Louis, Missouri

Owner
WEBSTER UNIVERSITY
Location
St. Louis, Missouri

Drawn Date	Scale
08/10/16	AS NOTED

NGG Project No.

Drawing Title
EMBED TITLE SHEET

Drawn By	Sheet No.
IY	210

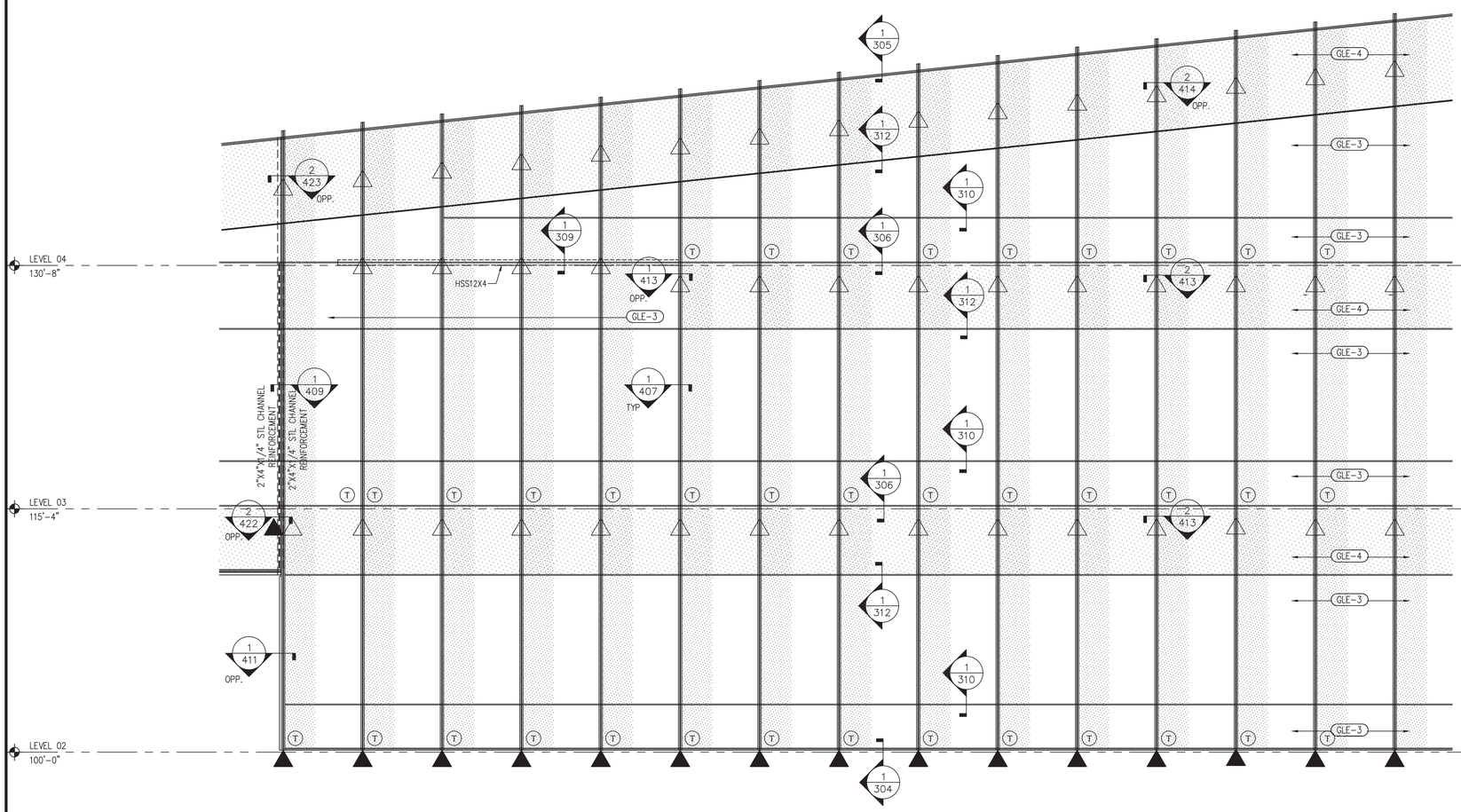

1 SOUTH ELEVATION
Scale: 3/4"=1'-0"
EGS-1
COLOR: PEWTER

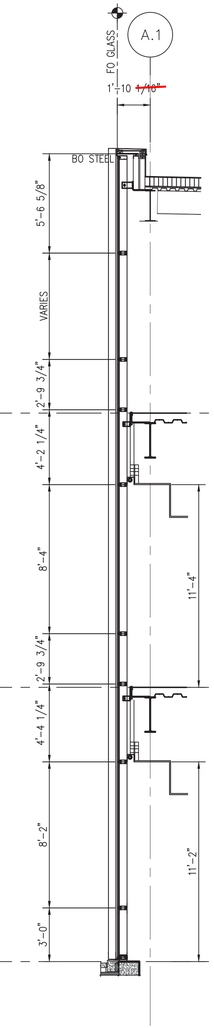

3 SECTION
Scale: 3/4"=1'-0"
ARCH REF: 2/A0405

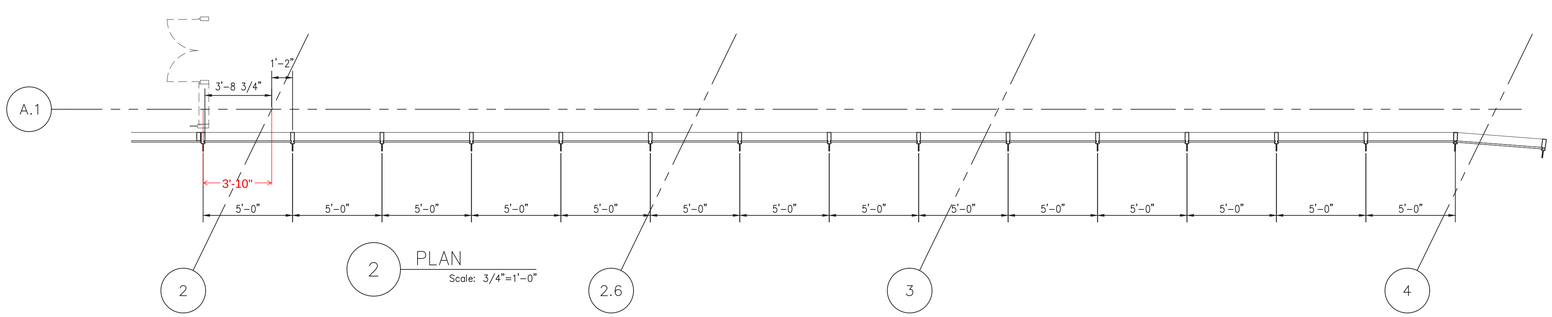

2 PLAN
Scale: 3/4"=1'-0"

NGG LTD

NGG LTD, INCORPORATED
1850 Craigshire Road Suite 202
St. Louis, Missouri 63146

Tel 314-336-2515
Fax 314-336-2521

Professional Seal

Sub. No.	Rev. No.	Date	Drawn By	Submitted/Revision Description
3	2	11/8/16	IY	3RD SUBMISSION
2	1	10/19/16	IY	2ND SUBMISSION
1	–	8/10/16	IY	1ST SUBMISSION

Proprietary Notice

This drawing sheet and contents herein are property of NGG. Use of this drawing, contents or design concepts for purposes other than estimating, drawing preparation and/or manufacturing for NGG shall be cause for legal recourse by NGG.

Project Name
WEBSTER UNIVERSITY
Location
St. Louis, Missouri

Architect
CANNON DESIGN
Location
St. Louis, Missouri

Contractor
PARIC
Location
St. Louis, Missouri

Owner
WEBSTER UNIVERSITY
Location
St. Louis, Missouri

Drawn Date	Scale
08/10/16	AS NOTED

NGG Project No.

Drawing Title
EMBED TITLE SHEET

Drawn By	Sheet No.
IY	211

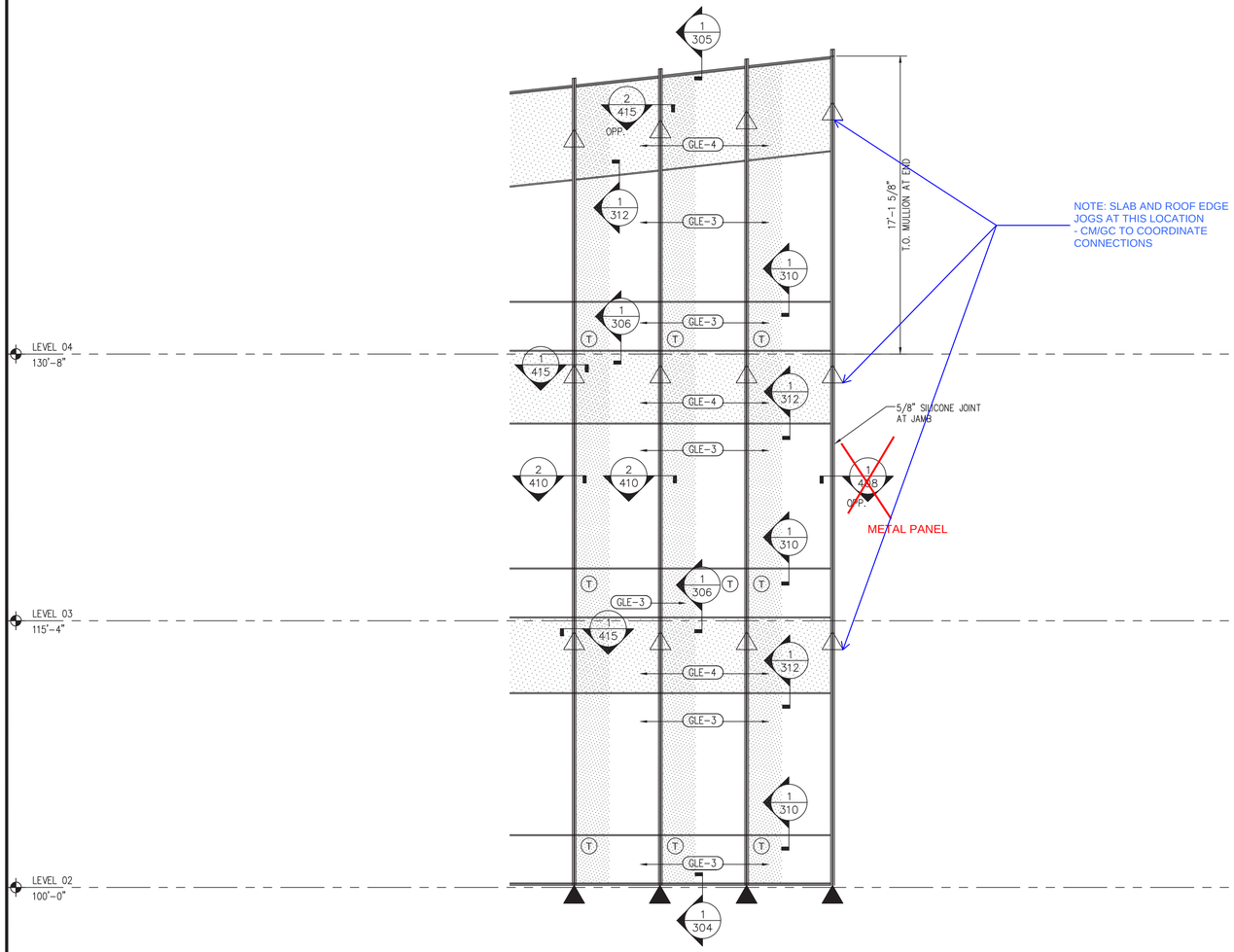

1 SOUTH ELEVATION
Scale: 3/4"=1'-0"

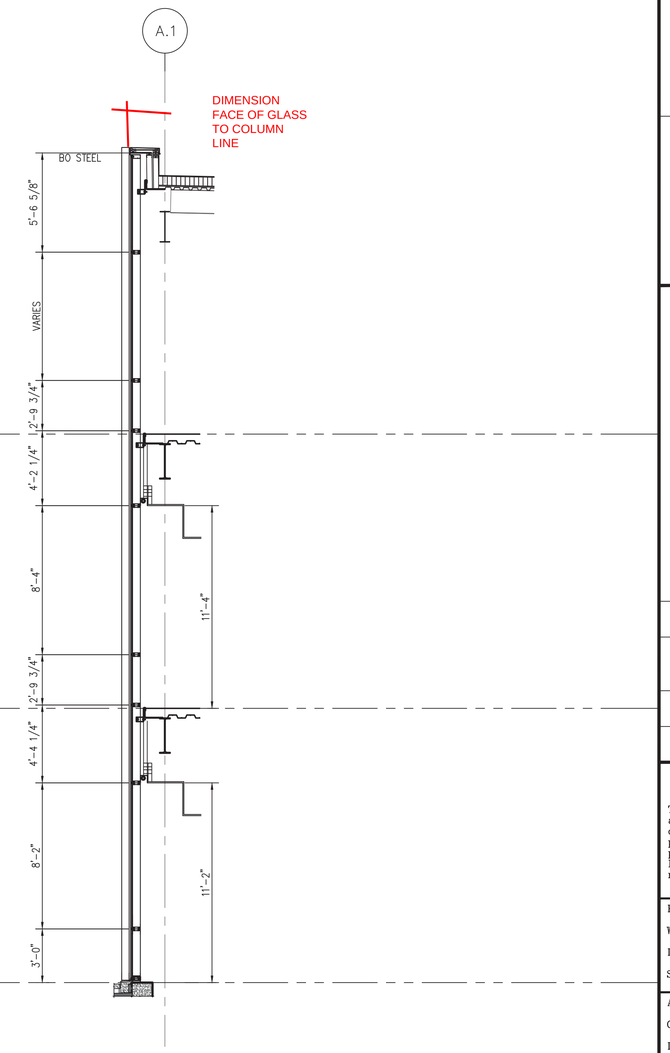

3 SECTION
Scale: 3/4"=1'-0"

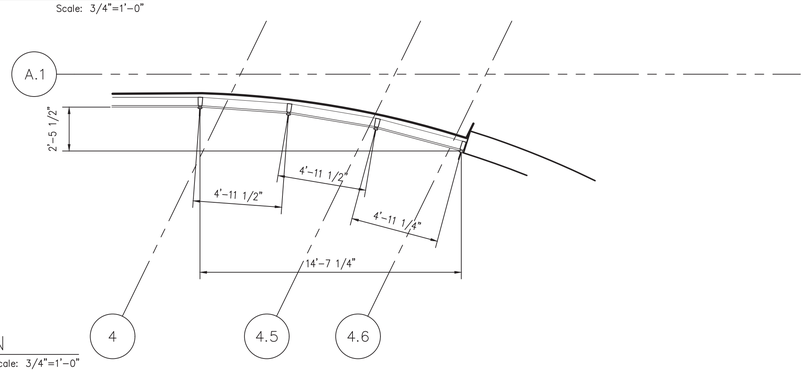

2 PLAN
Scale: 3/4"=1'-0"

NGG LTD

NGG LTD, INCORPORATED
1850 Craigshire Road Suite 202
St. Louis, Missouri 63146

Tel 314-336-2515
Fax 314-336-2521

Professional Seal

Sub. No.	Rev. No.	Date	Drawn By	Submitted/Revision Description
3	2	11/8/16	IY	3RD SUBMISSION
2	1	10/19/16	IY	2ND SUBMISSION
1	–	8/10/16	IY	1ST SUBMISSION

Proprietary Notice

This drawing sheet and contents herein are property of NGG. Use of this drawing, contents or design concepts for purposes other than estimating, drawing preparation and/or manufacturing for NGG shall be cause for legal recourse by NGG.

Project Name
WEBSTER UNIVERSITY
Location
St. Louis, Missouri

Architect
CANNON DESIGN
Location
St. Louis, Missouri

Contractor
PARIC
Location
St. Louis, Missouri

Owner
WEBSTER UNIVERSITY
Location
St. Louis, Missouri

Drawn Date	Scale
08/10/16	AS NOTED

NGG Project No.

Drawing Title
EMBED TITLE SHEET

Drawn By	Sheet No.
IY	212

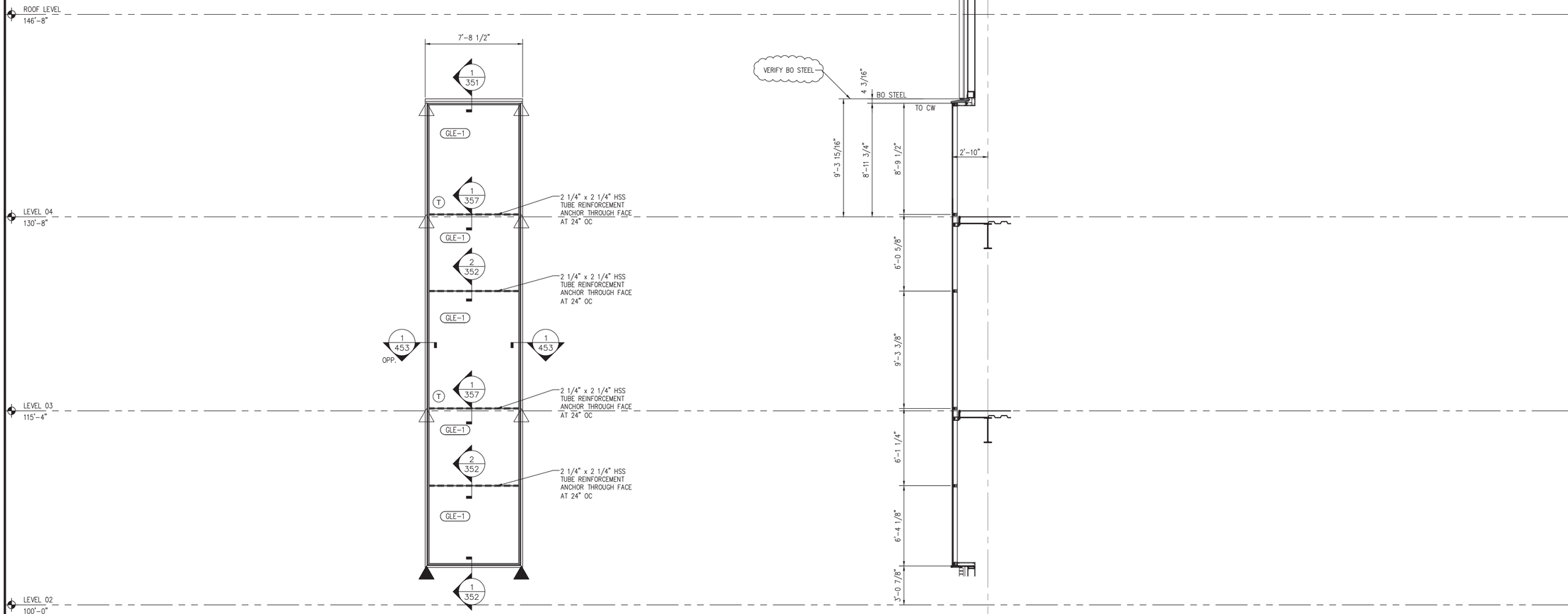

1 NORTH ELEVATION
Scale: 3/4"=1'-0"
EGS-3
COLOR: PEWTER

2 SECTION
Scale: 3/4"=1'-0"
ARCH REF: 4/A0402

NGG LTD

NGG LTD, INCORPORATED
1850 Craigshire Road Suite 202
St. Louis, Missouri 63146

Tel 314-336-2515
Fax 314-336-2521

Professional Seal

Sub. No.	Rev. No.	Date	Drawn By	Submitted/Revision Description
3	2	11/8/16	IY	3RD SUBMISSION
2	1	10/19/16	IY	2ND SUBMISSION
1	–	8/10/16	IY	1ST SUBMISSION

Proprietary Notice

This drawing sheet and contents herein are property of NGG. Use of this drawing, contents or design concepts for purposes other than estimating, drawing preparation and/or manufacturing for NGG shall be cause for legal recourse by NGG.

Project Name
WEBSTER UNIVERSITY
Location
St. Louis, Missouri

Architect
CANNON DESIGN
Location
St. Louis, Missouri

Contractor
PARIC
Location
St. Louis, Missouri

Owner
WEBSTER UNIVERSITY
Location
St. Louis, Missouri

Drawn Date	Scale
08/10/16	AS NOTED

NGG Project No.

Drawing Title
EMBED TITLE SHEET

Drawn By	Sheet No.
IY	213

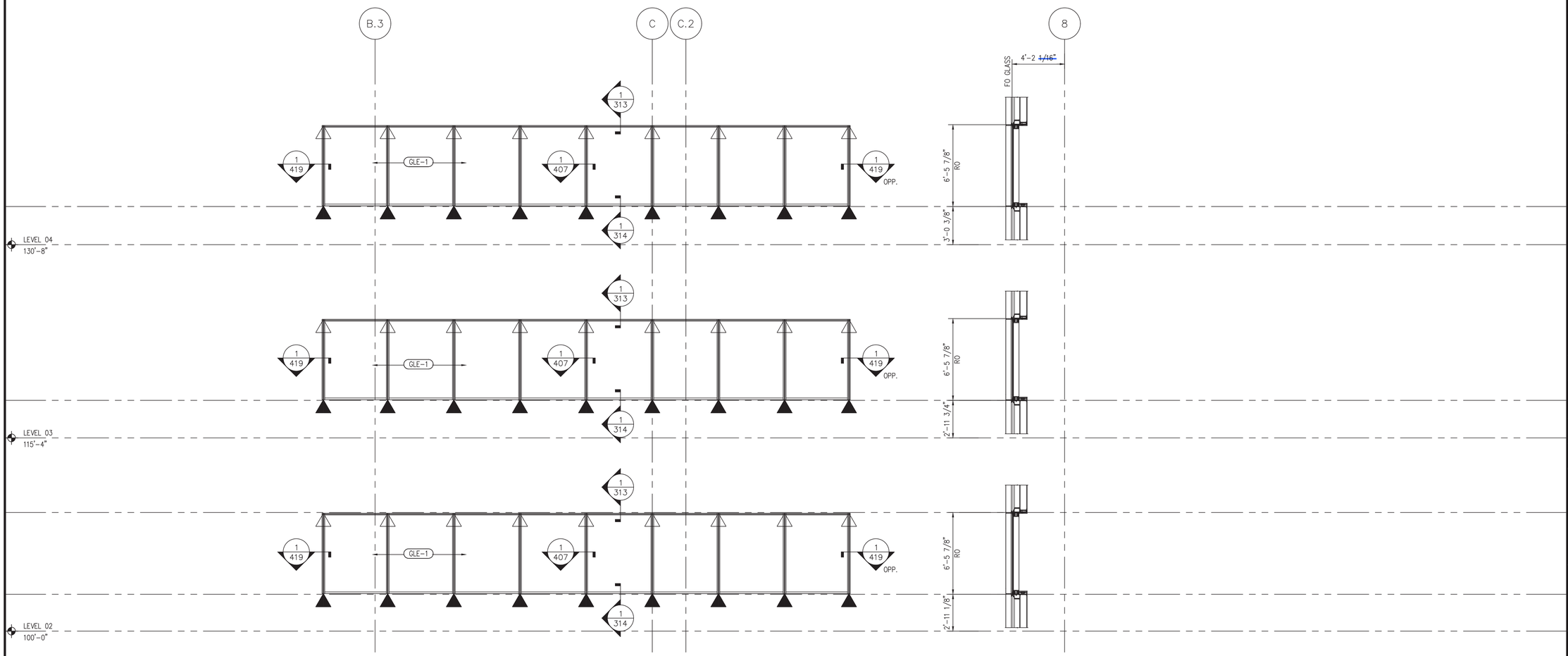

1 EAST ELEVATION

Scale: 3/4"=1'-0"

EGS-1
COLOR: PEWTER

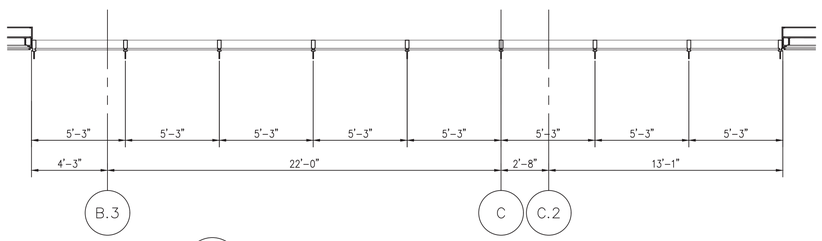

2 PLAN

Scale: 3/4"=1'-0"

NGG LTD

NGG LTD, INCORPORATED
1850 Craigshire Road Suite 202
St. Louis, Missouri 63146

Tel 314-336-2515
Fax 314-336-2521

Professional Seal

Sub. No.	Rev. No.	Date	Drawn By	Submittal/Revision Description
3	2	11/8/16	IY	3RD SUBMISSION
2	1	10/19/16	IY	2ND SUBMISSION
1	–	8/10/16	IY	1ST SUBMISSION

Proprietary Notice

This drawing sheet and contents herein are property of NGG. Use of this drawing, contents or design concepts for purposes other than estimating, drawing preparation and/or manufacturing for NGG shall be cause for legal recourse by NGG.

Project Name
WEBSTER UNIVERSITY
Location
St. Louis, Missouri

Architect
CANNON DESIGN
Location
St. Louis, Missouri

Contractor
PARIC
Location
St. Louis, Missouri

Owner
WEBSTER UNIVERSITY
Location
St. Louis, Missouri

Drawn Date	Scale
08/10/16	AS NOTED

NGG Project No.

Drawing Title
EMBED TITLE SHEET

Drawn By	Sheet No.
IY	214

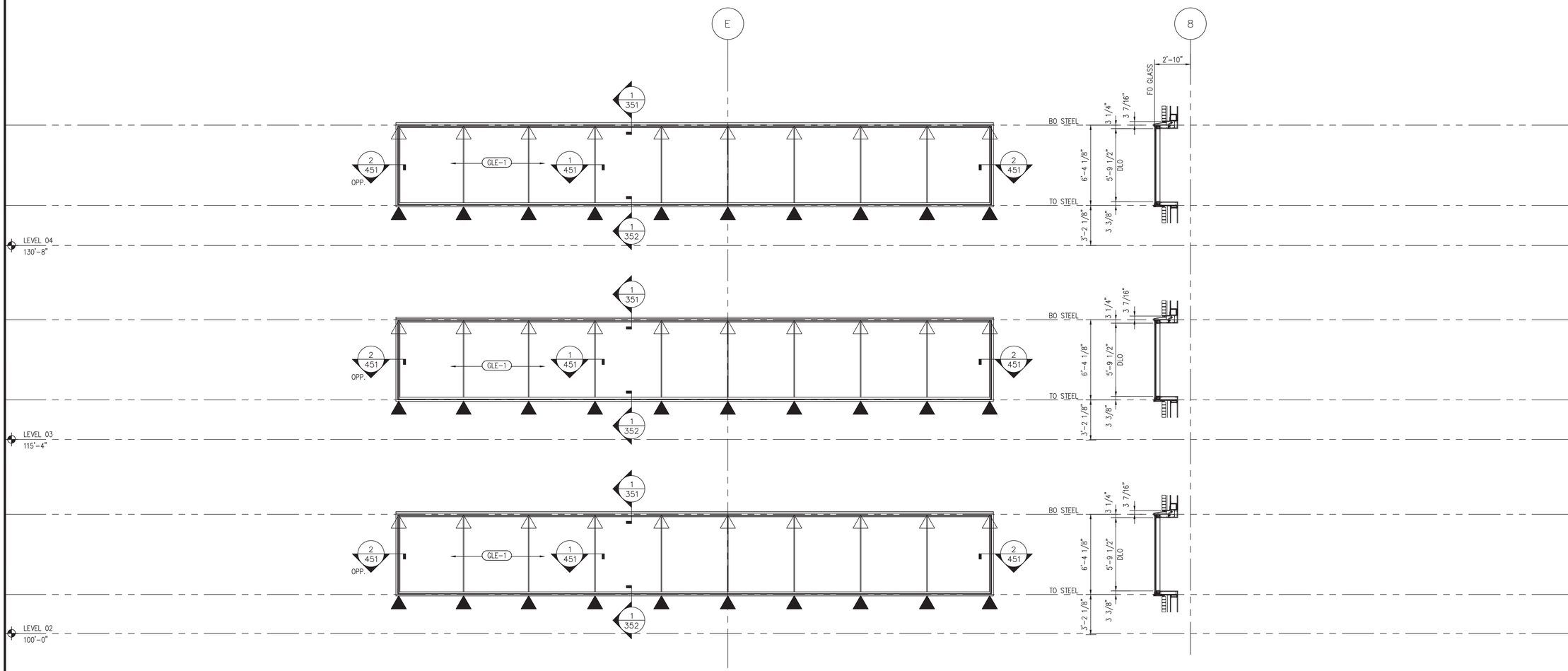

1 EAST ELEVATION

Scale: 3/4"=1'-0"

EGS-3
COLOR: PEWTER

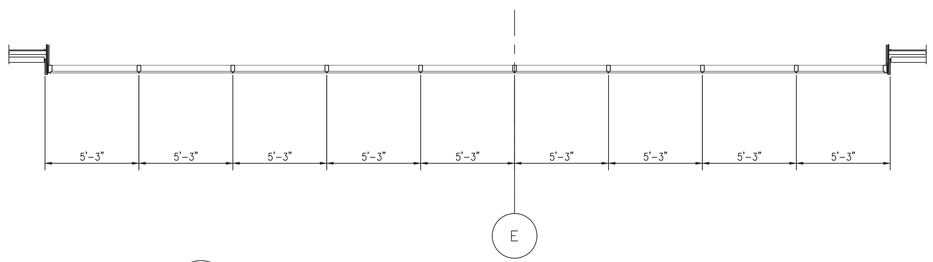

2 PLAN

Scale: 3/4"=1'-0"

NGG LTD

NGG LTD, INCORPORATED
1850 Craigshire Road Suite 202
St. Louis, Missouri 63146

Tel 314-336-2515
Fax 314-336-2521

Professional Seal

Sub. No.	Rev. No.	Date	Drawn By	Submitted/Revision Description
3	2	11/8/16	IY	3RD SUBMISSION
2	1	10/19/16	IY	2ND SUBMISSION
1	–	8/10/16	IY	1ST SUBMISSION

Proprietary Notice

This drawing sheet and contents herein are property of NGG. Use of this drawing, contents or design concepts for purposes other than estimating, drawing preparation and/or manufacturing for NGG shall be cause for legal recourse by NGG.

Project Name
WEBSTER UNIVERSITY
Location
St. Louis, Missouri

Architect
CANNON DESIGN
Location
St. Louis, Missouri

Contractor
PARIC
Location
St. Louis, Missouri

Owner
WEBSTER UNIVERSITY
Location
St. Louis, Missouri

Drawn Date	Scale
08/10/16	AS NOTED

NGG Project No.

Drawing Title
EMBED TITLE SHEET

Drawn By	Sheet No.
IY	215

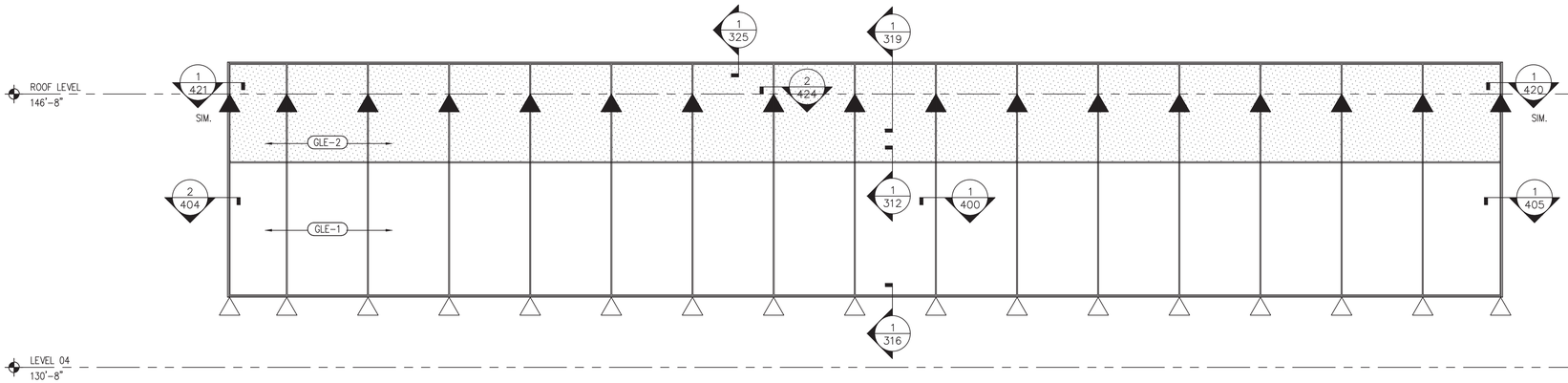

1 WEST ELEVATION
Scale: 3/4"=1'-0"
EGS-2
COLOR: PEWTER

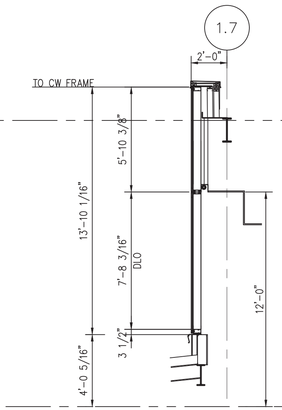

2 SECTION
Scale: 3/4"=1'-0"
ARCH REF: 1/A0406

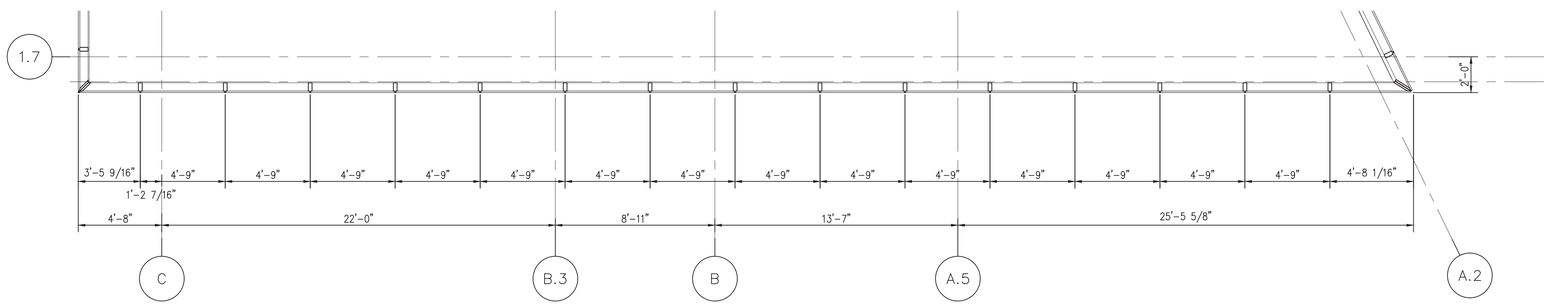

2 PLAN
Scale: 3/4"=1'-0"

NGG LTD

NGG LTD, INCORPORATED
1850 Craigshire Road Suite 202
St. Louis, Missouri 63146

Tel 314-336-2515
Fax 314-336-2521

Professional Seal

Sub. No.	Rev. No.	Date	Drawn By	Submitted/Revision Description
3	2	11/8/16	IY	3RD SUBMISSION
2	1	10/19/16	IY	2ND SUBMISSION
1	–	8/10/16	IY	1ST SUBMISSION

Proprietary Notice

This drawing sheet and contents herein are property of NGG. Use of this drawing, contents or design concepts for purposes other than estimating, drawing preparation and/or manufacturing for NGG shall be cause for legal recourse by NGG.

Project Name
WEBSTER UNIVERSITY
Location
St. Louis, Missouri

Architect
CANNON DESIGN
Location
St. Louis, Missouri

Contractor
PARIC
Location
St. Louis, Missouri

Owner
WEBSTER UNIVERSITY
Location
St. Louis, Missouri

Drawn Date	Scale
08/10/16	AS NOTED

NGG Project No.

Drawing Title
EMBED TITLE SHEET

Drawn By	Sheet No.
IY	216

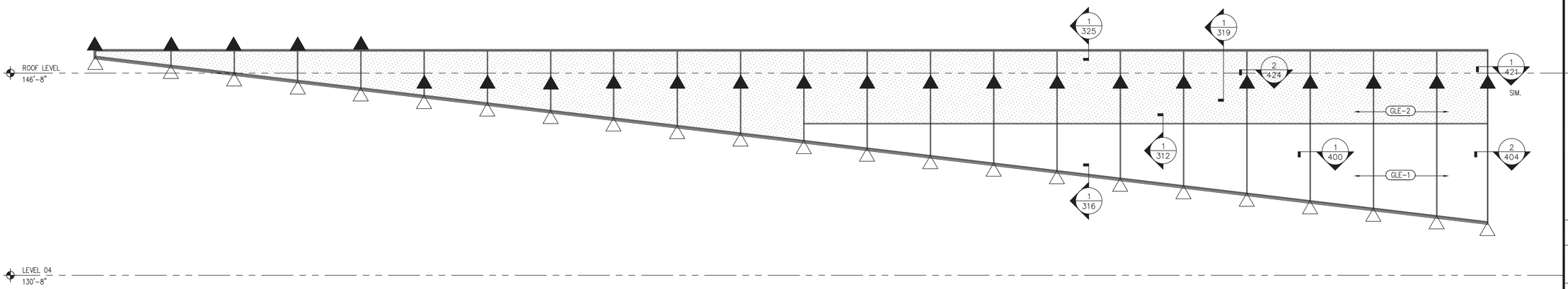

1 NORTH ELEVATION

Scale: 3/4"=1'-0"

EGS-2
COLOR: PEWTER

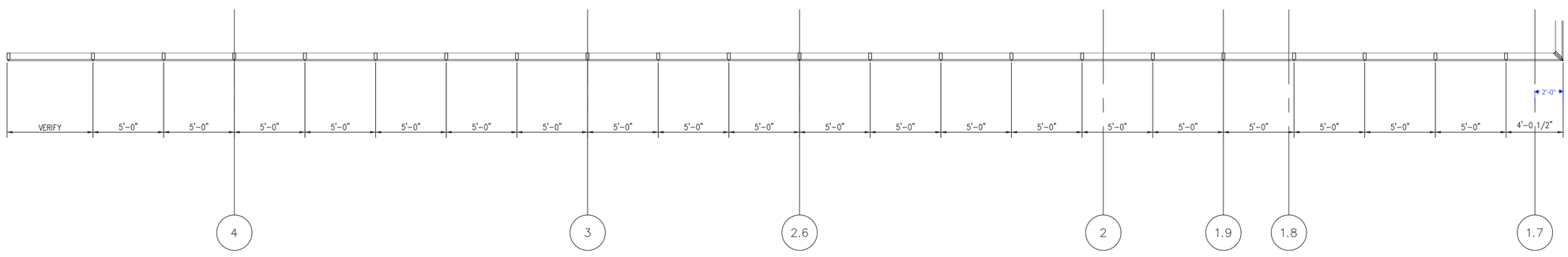

2 PLAN

Scale: 3/4"=1'-0"

NGG LTD

NGG LTD, INCORPORATED
1850 Craigshire Road Suite 202
St. Louis, Missouri 63146

Tel 314-336-2515
Fax 314-336-2521

Professional Seal

Sub. No.	Rev. No.	Date	Drawn By	Submitted/Revision Description
3	2	11/8/16	IY	3RD SUBMISSION
2	1	10/19/16	IY	2ND SUBMISSION
1	–	8/10/16	IY	1ST SUBMISSION

Proprietary Notice

This drawing sheet and contents herein are property of NGG. Use of this drawing, contents or design concepts for purposes other than estimating, drawing preparation and/or manufacturing for NGG shall be cause for legal recourse by NGG.

Project Name
WEBSTER UNIVERSITY
Location
St. Louis, Missouri

Architect
CANNON DESIGN
Location
St. Louis, Missouri

Contractor
PARIC
Location
St. Louis, Missouri

Owner
WEBSTER UNIVERSITY
Location
St. Louis, Missouri

Drawn Date	Scale
08/10/16	AS NOTED

NGG Project No.

Drawing Title
EMBED TITLE SHEET

Drawn By	Sheet No.
IY	217

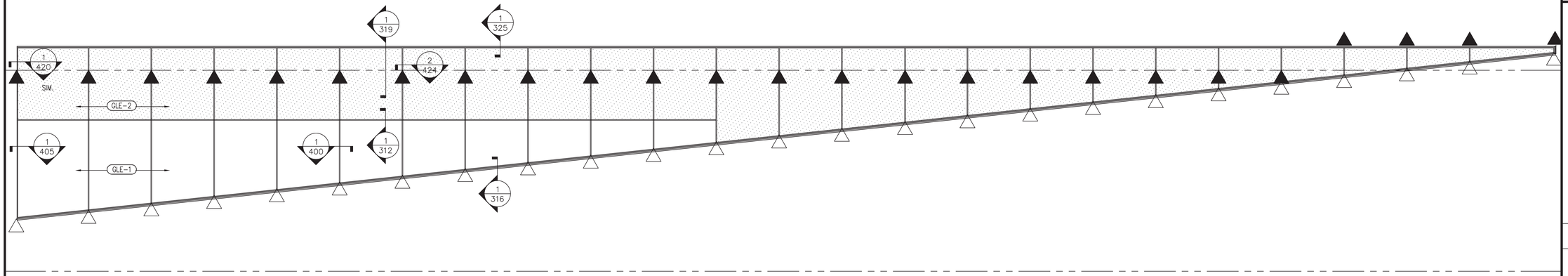

1 SOUTH ELEVATION
Scale: 3/4"=1'-0"
EGS-2
COLOR: PEWTER

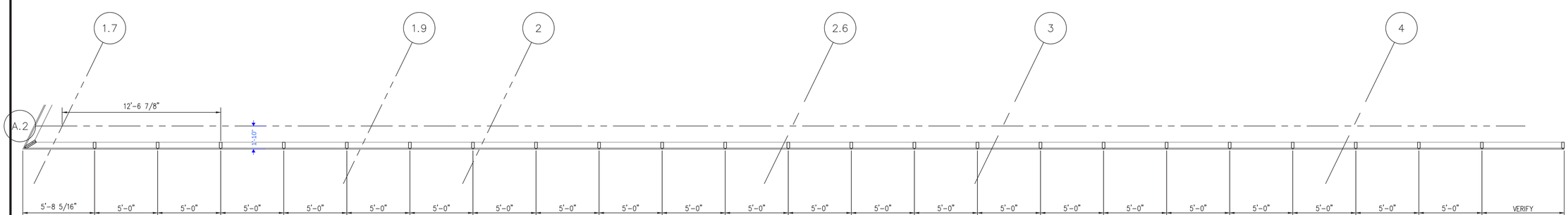

2 PLAN
Scale: 3/4"=1'-0"

NGG LTD

NGG LTD, INCORPORATED
1850 Craigshire Road Suite 202
St. Louis, Missouri 63146

Tel 314-336-2515
Fax 314-336-2521

Professional Seal

Sub. No.	Rev. No.	Date	Drawn By	Submitted/Revision Description
3	2	11/8/16	IY	3RD SUBMISSION
2	1	10/19/16	IY	2ND SUBMISSION
1	–	8/10/16	IY	1ST SUBMISSION

Proprietary Notice

This drawing sheet and contents herein are property of NGG. Use of this drawing, contents or design concepts for purposes other than estimating, drawing preparation and/or manufacturing for NGG shall be cause for legal recourse by NGG.

Project Name
WEBSTER UNIVERSITY
Location
St. Louis, Missouri

Architect
CANNON DESIGN
Location
St. Louis, Missouri

Contractor
PARIC
Location
St. Louis, Missouri

Owner
WEBSTER UNIVERSITY
Location
St. Louis, Missouri

Drawn Date
08/10/16

Scale
AS NOTED

NGG Project No.

Drawing Title
EMBED TITLE SHEET

Drawn By
IY

Sheet No.
218

THIS DETAIL WAS CHANGES FROM PREVIOUS SUBMITTAL. IT IS NOT THE CORRECT DETAIL FOR THE LEVEL 01 JAMB DETAIL ON THE NORTH ELEVATION.

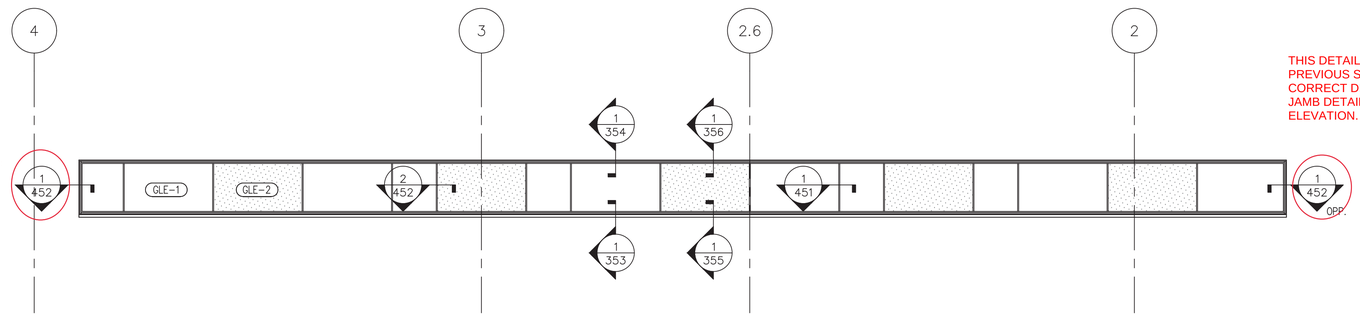

THIS DETAIL WAS CHANGES FROM PREVIOUS SUBMITTAL. IT IS NOT THE CORRECT DETAIL FOR THE LEVEL 01 JAMB DETAIL ON THE NORTH ELEVATION.

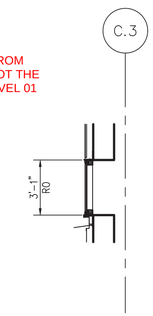

1 NORTH ELEVATION
Scale: 3/4"=1'-0"
EGS-3
COLOR: BLACK

3 SECTION
Scale: 3/4"=1'-0"

COORDINATE EXISTING CONDITIONS. CONCRETE WALL IS 1" OUT FROM CONSTRUCTION DOCUMENTS. AT LEVEL 02, CURTAINWALL SHOULD BE INSTALLED 1'-10" FROM COLUMN LINE TO FACE OF GLASS. FLASHING BELOW WILL NEED TO BE MODIFIED PER DISCUSSION AT MEETING.

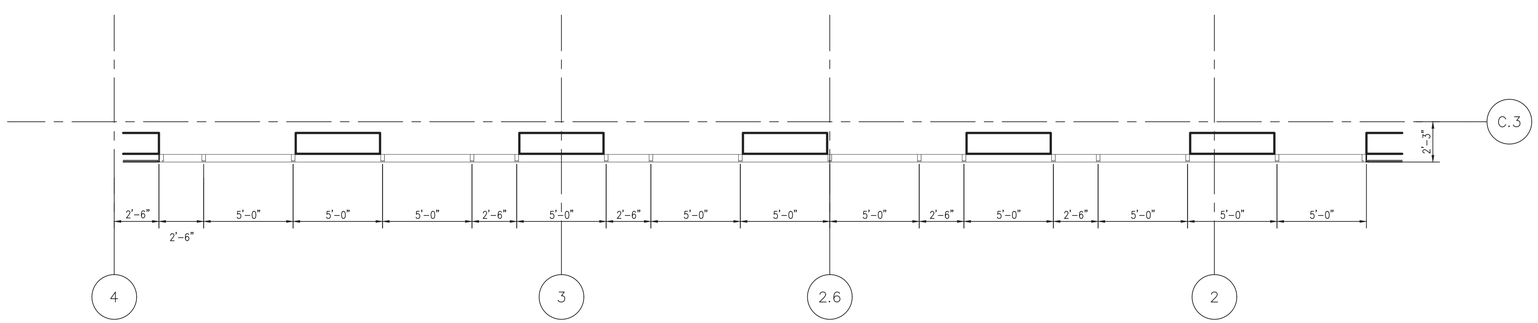

2 PLAN
Scale: 3/4"=1'-0"

NGG LTD

NGG LTD, INCORPORATED
1850 Craigshire Road Suite 202
St. Louis, Missouri 63146

Tel 314-336-2515
Fax 314-336-2521

Professional Seal

Sub. No.	Rev. No.	Date	Drawn By	Submitted/Revision Description
3	2	11/8/16	IY	3RD SUBMISSION
2	1	10/19/16	IY	2ND SUBMISSION
1	–	8/10/16	IY	1ST SUBMISSION

Proprietary Notice

This drawing sheet and contents herein are property of NGG. Use of this drawing, contents or design concepts for purposes other than estimating, drawing preparation and/or manufacturing for NGG shall be cause for legal recourse by NGG.

Project Name
WEBSTER UNIVERSITY
Location
St. Louis, Missouri

Architect
CANNON DESIGN
Location
St. Louis, Missouri

Contractor
PARIC
Location
St. Louis, Missouri

Owner
WEBSTER UNIVERSITY
Location
St. Louis, Missouri

Drawn Date	Scale
08/10/16	AS NOTED

NGG Project No.

Drawing Title
EMBED TITLE SHEET

Drawn By	Sheet No.
IY	219

FRAMING SHOULD MATCH EXISTING FRAMING IN PLACE AT EAB BUILDING ENTRIES: COLOR, DEPTH, CAPTURED, ETC...

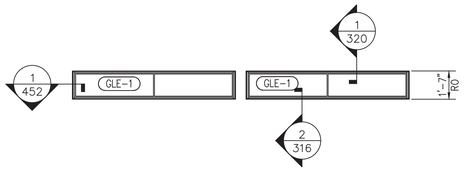

1 ELEVATION AT MONITOR
Scale: 3/4"=1'-0"
EGS-3
COLOR: PEWTER

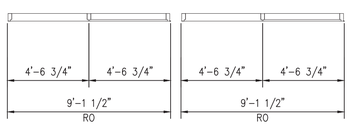

2 PLAN
Scale: 3/4"=1'-0"

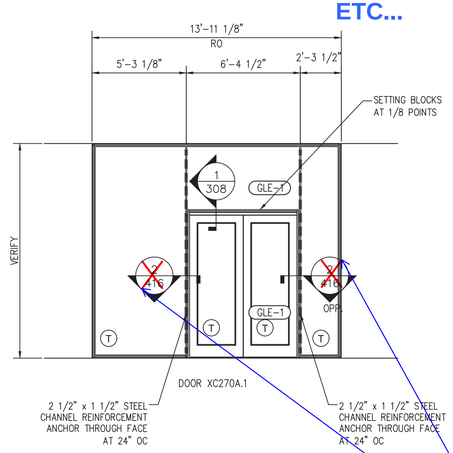

3 ENTRANCE ELEVATION
Scale: 3/4"=1'-0"
EGS-2
COLOR: MATCH EXISTING EAB SYSTEMS COLOR

DETAIL DOES NOT SHOW INSULATION GLAZING

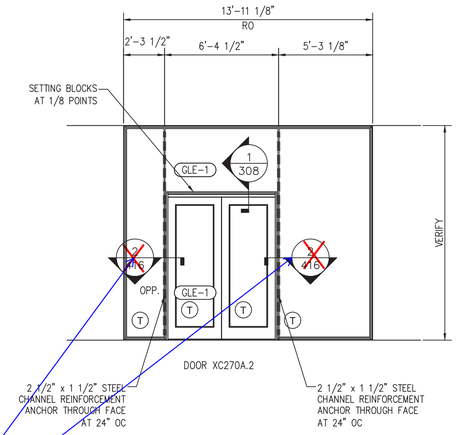

5 ENTRANCE ELEVATION
Scale: 3/4"=1'-0"
EGS-2
COLOR: MATCH EXISTING EAB SYSTEMS COLOR

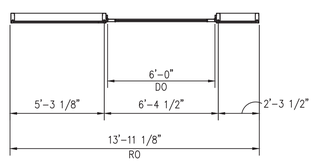

4 PLAN
Scale: 3/4"=1'-0"

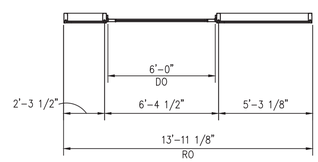

6 PLAN
Scale: 3/4"=1'-0"

NGG LTD

NGG LTD, INCORPORATED
1850 Craigshire Road Suite 202
St. Louis, Missouri 63146

Tel 314-336-2515
Fax 314-336-2521

Professional Seal

Sub. No.	Rev. No.	Date	Drawn By	Submittal/Revision Description
3	2	11/8/16	IY	3RD SUBMISSION
2	1	10/19/16	IY	2ND SUBMISSION
1	–	8/10/16	IY	1ST SUBMISSION

Proprietary Notice

This drawing sheet and contents herein are property of NGG. Use of this drawing, contents or design concepts for purposes other than estimating, drawing preparation and/or manufacturing for NGG shall be cause for legal recourse by NGG.

Project Name
WEBSTER UNIVERSITY
Location
St. Louis, Missouri

Architect
CANNON DESIGN
Location
St. Louis, Missouri

Contractor
PARIC
Location
St. Louis, Missouri

Owner
WEBSTER UNIVERSITY
Location
St. Louis, Missouri

Drawn Date: 08/10/16
Scale: AS NOTED

NGG Project No.

Drawing Title
EMBED TITLE SHEET

Drawn By: IY
Sheet No.: 220

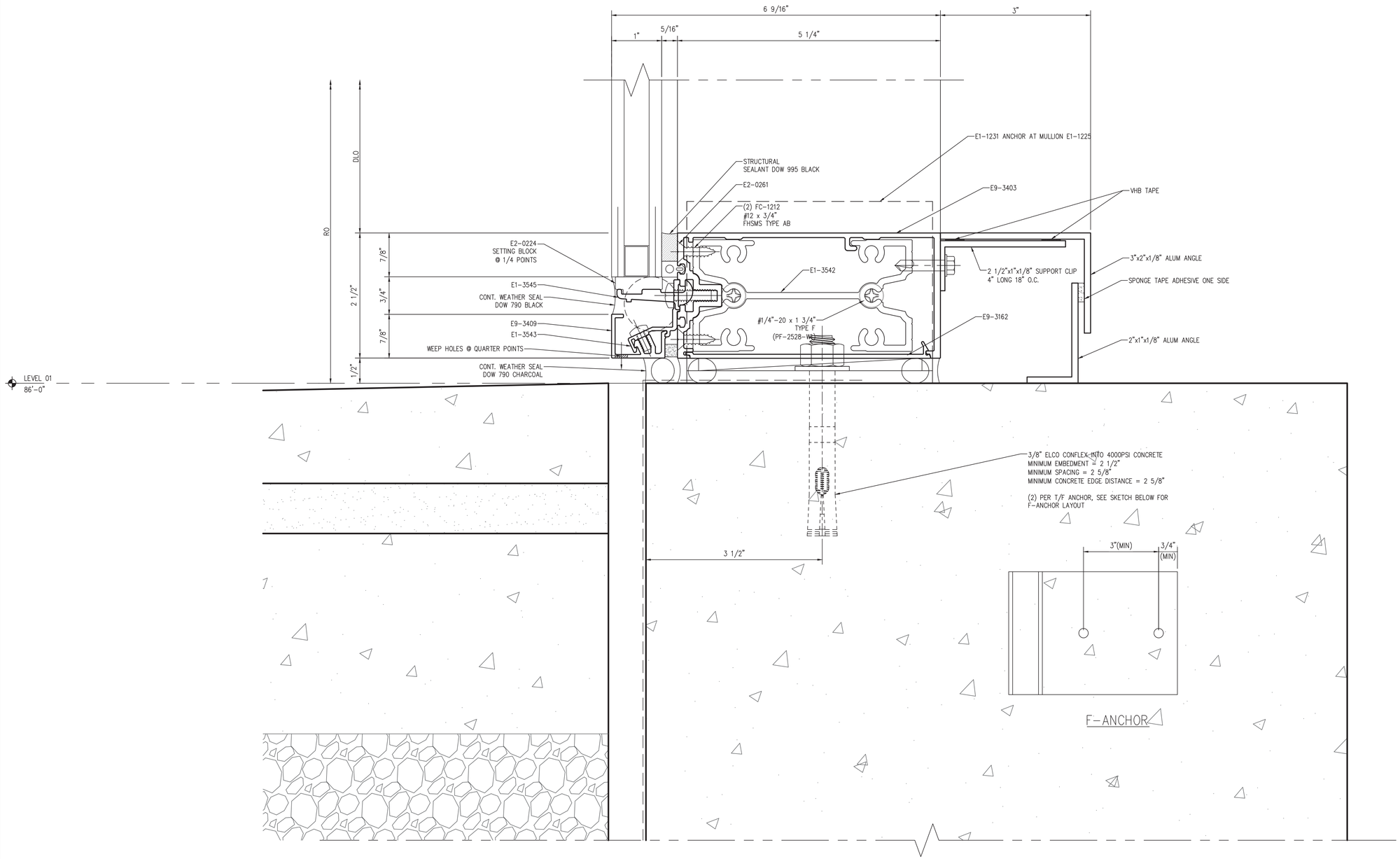

1 SILL DETAIL

Scale: 1:1

NGG LTD

NGG LTD, INCORPORATED
1850 Craigshire Road Suite 202
St. Louis, Missouri 63146

Tel 314-336-2515
Fax 314-336-2521

Professional Seal

Sub. No.	Rev. No.	Date	Drawn By	Submitted/Revision Description
3	2	11/8/16	IY	3RD SUBMISSION
2	1	10/19/16	IY	2ND SUBMISSION
1	–	8/10/16	IY	1ST SUBMISSION

Proprietary Notice

This drawing sheet and contents herein are property of NGG. Use of this drawing, contents or design concepts for purposes other than estimating, drawing preparation and/or manufacturing for NGG shall be cause for legal recourse by NGG.

Project Name
WEBSTER UNIVERSITY
Location
St. Louis, Missouri

Architect
CANNON DESIGN
Location
St. Louis, MO

Contractor
PARIC
Location
St. Louis, Missouri

Owner
WEBSTER UNIVERSITY
Location
St. Louis, Missouri

Drawn Date	Scale
8/10/16	AS NOTED

NGG Project No.

Drawing Title
DETAILS

Drawn By	Sheet No.
IY	300

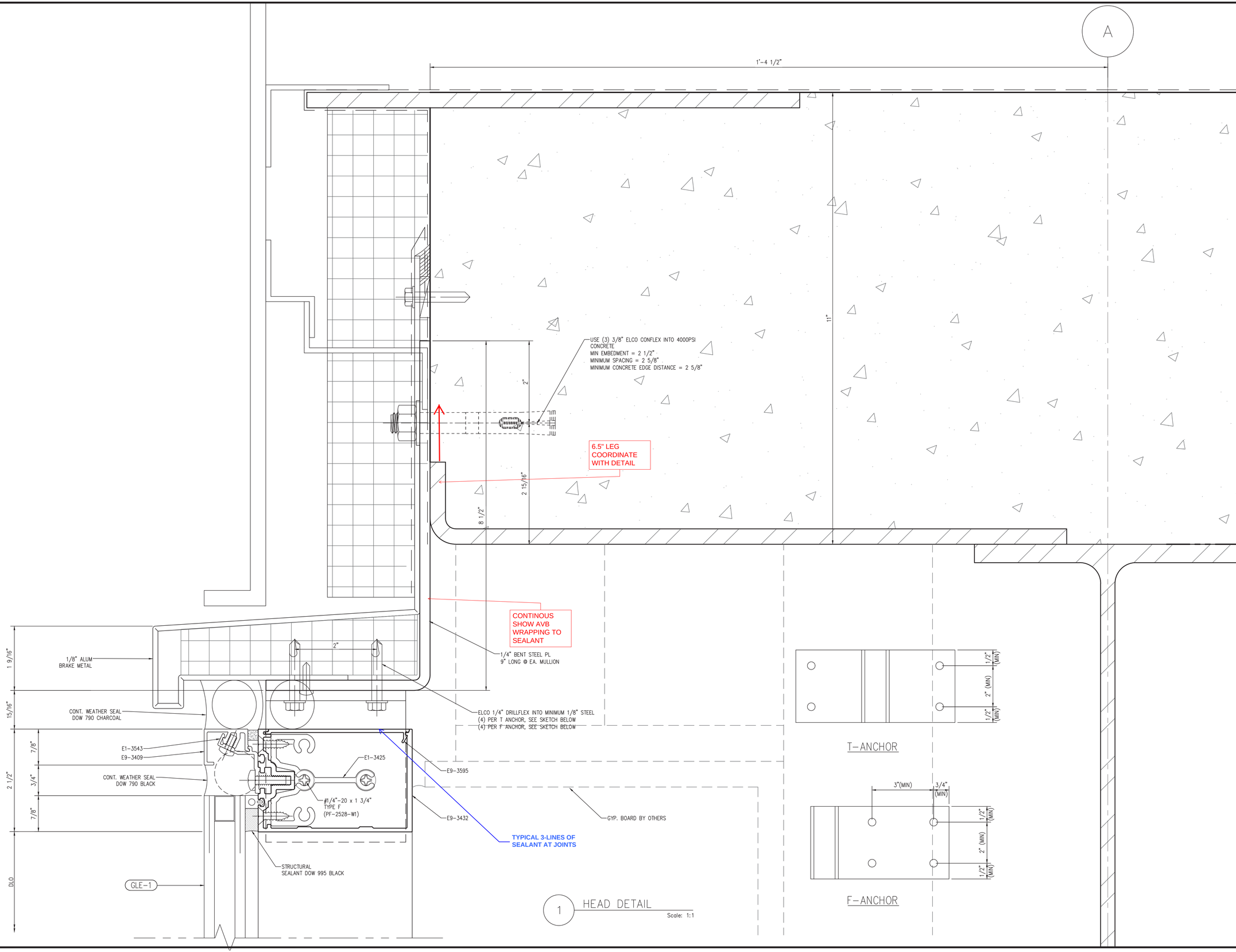

NGG LTD

NGG LTD, INCORPORATED
1850 Craigshire Road Suite 202
St. Louis, Missouri 63146

Tel 314-336-2515
Fax 314-336-2521

Professional Seal

Sub. No.	Rev. No.	Date	Drawn By	Submitted/Revision Description
3	2	11/8/16	IY	3RD SUBMISSION
2	1	10/19/16	IY	2ND SUBMISSION
1	–	8/10/16	IY	1ST SUBMISSION

Proprietary Notice

This drawing sheet and contents herein are property of NGG. Use of this drawing, contents or design concepts for purposes other than estimating, drawing preparation and/or manufacturing for NGG shall be cause for legal recourse by NGG.

Project Name
WEBSTER UNIVERSITY
Location
St. Louis, Missouri

Architect
CANNON DESIGN
Location
St. Louis, MO

Contractor
PARIC
Location
St. Louis, Missouri

Owner
WEBSTER UNIVERSITY
Location
St. Louis, Missouri

Drawn Date	Scale
8/10/16	AS NOTED

NGG Project No.

Drawing Title
DETAILS

Drawn By	Sheet No.
IY	301

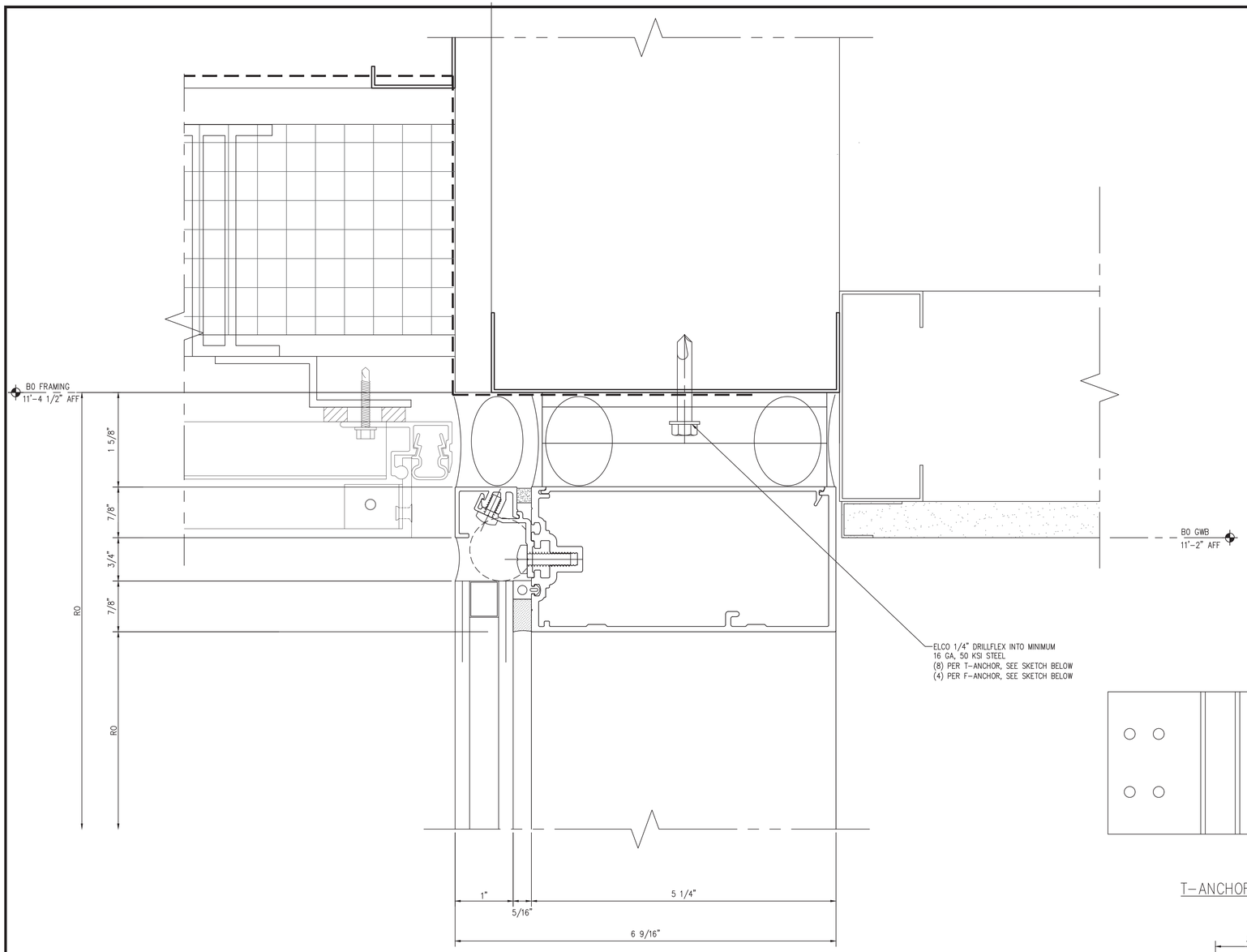

1 HEAD DETAIL

Scale: 1:1

REF. 8/A0454

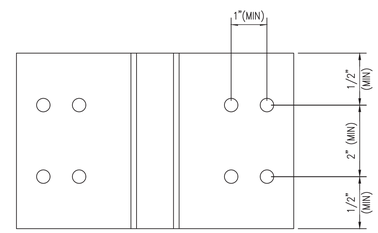

T-ANCHOR

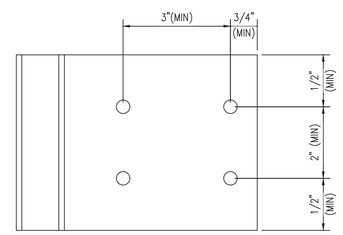

F-ANCHOR

NGG LTD

NGG LTD, INCORPORATED
1850 Craigshire Road Suite 202
St. Louis, Missouri 63146

Tel 314-336-2515
Fax 314-336-2521

Professional Seal

Sub. No.	Rev. No.	Date	Drawn By	Submitted/Revision Description
3	2	11/8/16	IY	3RD SUBMISSION
2	1	10/19/16	IY	2ND SUBMISSION
1	–	8/10/16	IY	1ST SUBMISSION

Proprietary Notice

This drawing sheet and contents herein are property of NGG. Use of this drawing, contents or design concepts for purposes other than estimating, drawing preparation and/or manufacturing for NGG shall be cause for legal recourse by NGG.

Project Name
WEBSTER UNIVERSITY
Location
St. Louis, Missouri

Architect
CANNON DESIGN
Location
St. Louis, MO

Contractor
PARIC
Location
St. Louis, Missouri

Owner
WEBSTER UNIVERSITY
Location
St. Louis, Missouri

Drawn Date	Scale
8/10/16	AS NOTED

NGG Project No.

Drawing Title
DETAILS

Drawn By	Sheet No.
IY	302

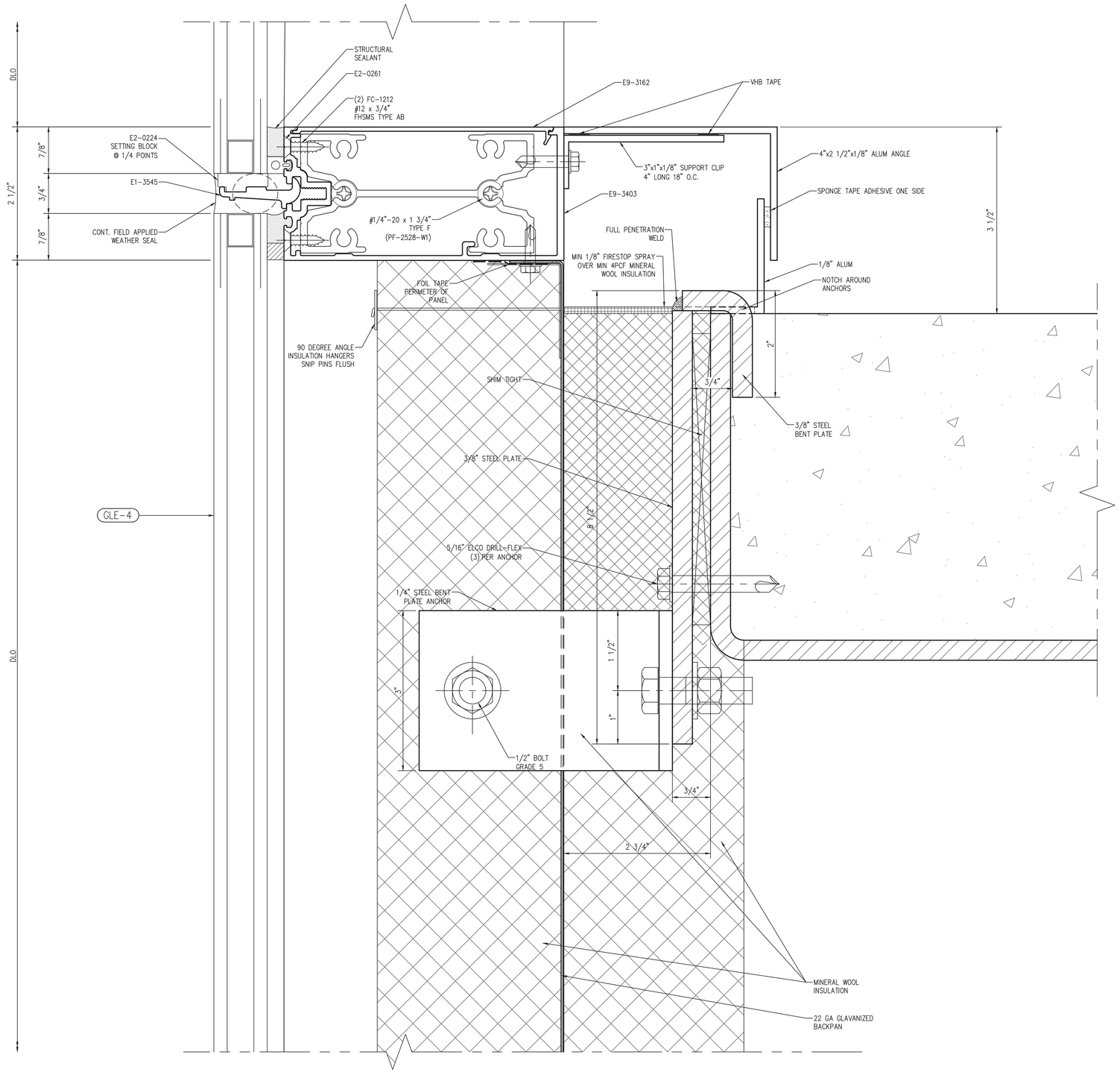

1 ANCHOR DETAIL

REF. 9/A0455 Scale: 1:1

NGG LTD

NGG LTD, INCORPORATED
1850 Craigshire Road Suite 202
St. Louis, Missouri 63146

Tel 314-336-2515
Fax 314-336-2521

Professional Seal

Sub. No.	Rev. No.	Date	Drawn By	Submitted/Revision Description
3	2	11/8/16	IY	3RD SUBMISSION
2	1	10/19/16	IY	2ND SUBMISSION
1	–	8/10/16	IY	1ST SUBMISSION

Proprietary Notice

This drawing sheet and contents herein are property of NGG. Use of this drawing, contents or design concepts for purposes other than estimating, drawing preparation and/or manufacturing for NGG shall be cause for legal recourse by NGG.

Project Name
WEBSTER UNIVERSITY
Location
St. Louis, Missouri

Architect
CANNON DESIGN
Location
St. Louis, MO

Contractor
PARIC
Location
St. Louis, Missouri

Owner
WEBSTER UNIVERSITY
Location
St. Louis, Missouri

Drawn Date	Scale
8/10/16	AS NOTED

NGG Project No.

Drawing Title
DETAILS

Drawn By	Sheet No.
IY	303

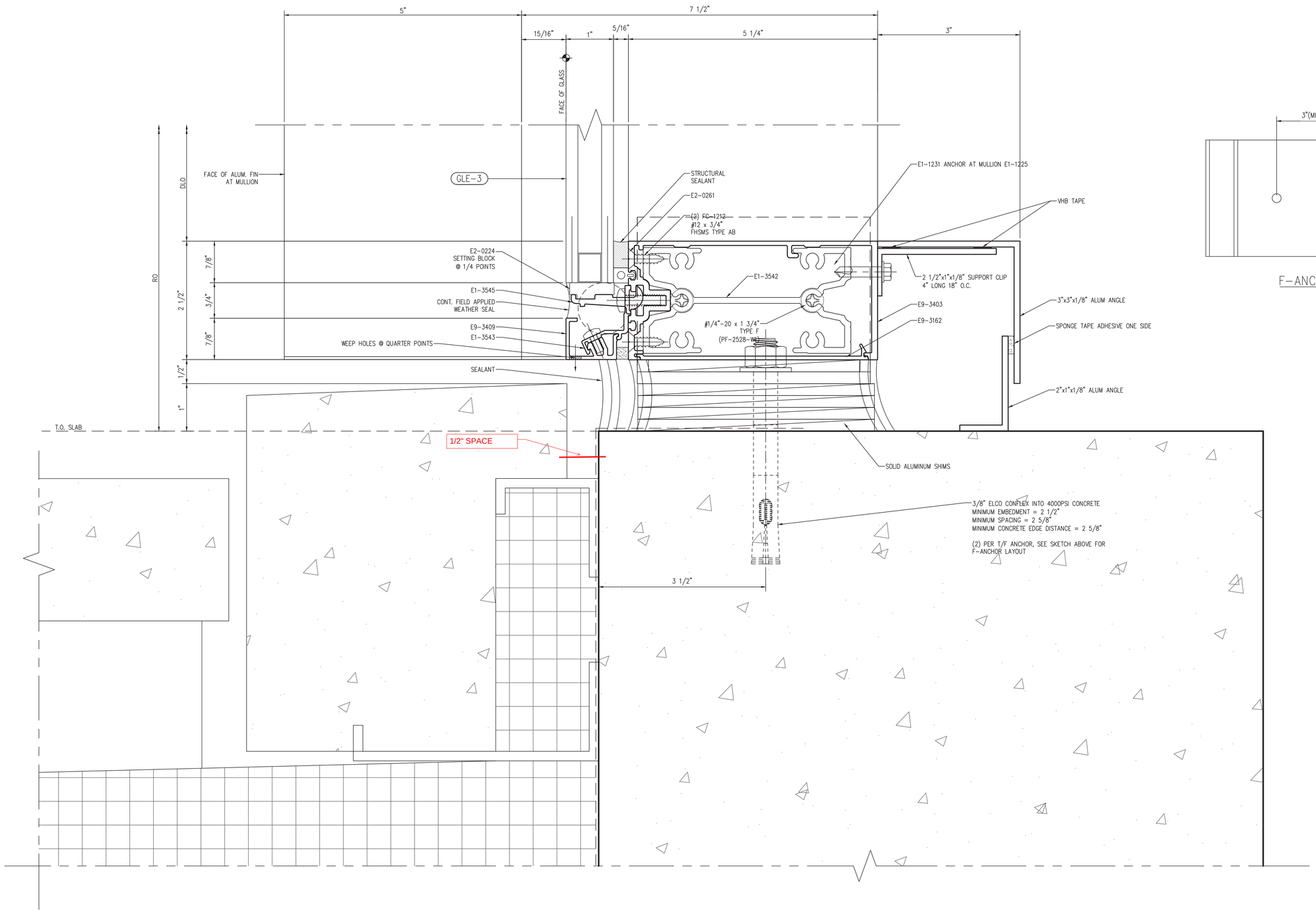

1 SILL DETAIL

REF. 9/A0455

Scale: 1:1

NGG LTD

NGG LTD, INCORPORATED
1850 Craigshire Road Suite 202
St. Louis, Missouri 63146

Tel 314-336-2515
Fax 314-336-2521

Professional Seal

Sub. No.	Rev. No.	Date	Drawn By	Submitted/Revision Description
3	2	11/8/16	IY	3RD SUBMISSION
2	1	10/19/16	IY	2ND SUBMISSION
1	–	8/10/16	IY	1ST SUBMISSION

Proprietary Notice

This drawing sheet and contents herein are property of NGG. Use of this drawing, contents or design concepts for purposes other than estimating, drawing preparation and/or manufacturing for NGG shall be cause for legal recourse by NGG.

Project Name
WEBSTER UNIVERSITY
Location
St. Louis, Missouri

Architect
CANNON DESIGN
Location
St. Louis, MO

Contractor
PARIC
Location
St. Louis, Missouri

Owner
WEBSTER UNIVERSITY
Location
St. Louis, Missouri

Drawn Date	Scale
8/10/16	AS NOTED

NGG Project No.

Drawing Title
DETAILS

Drawn By	Sheet No.
IY	304

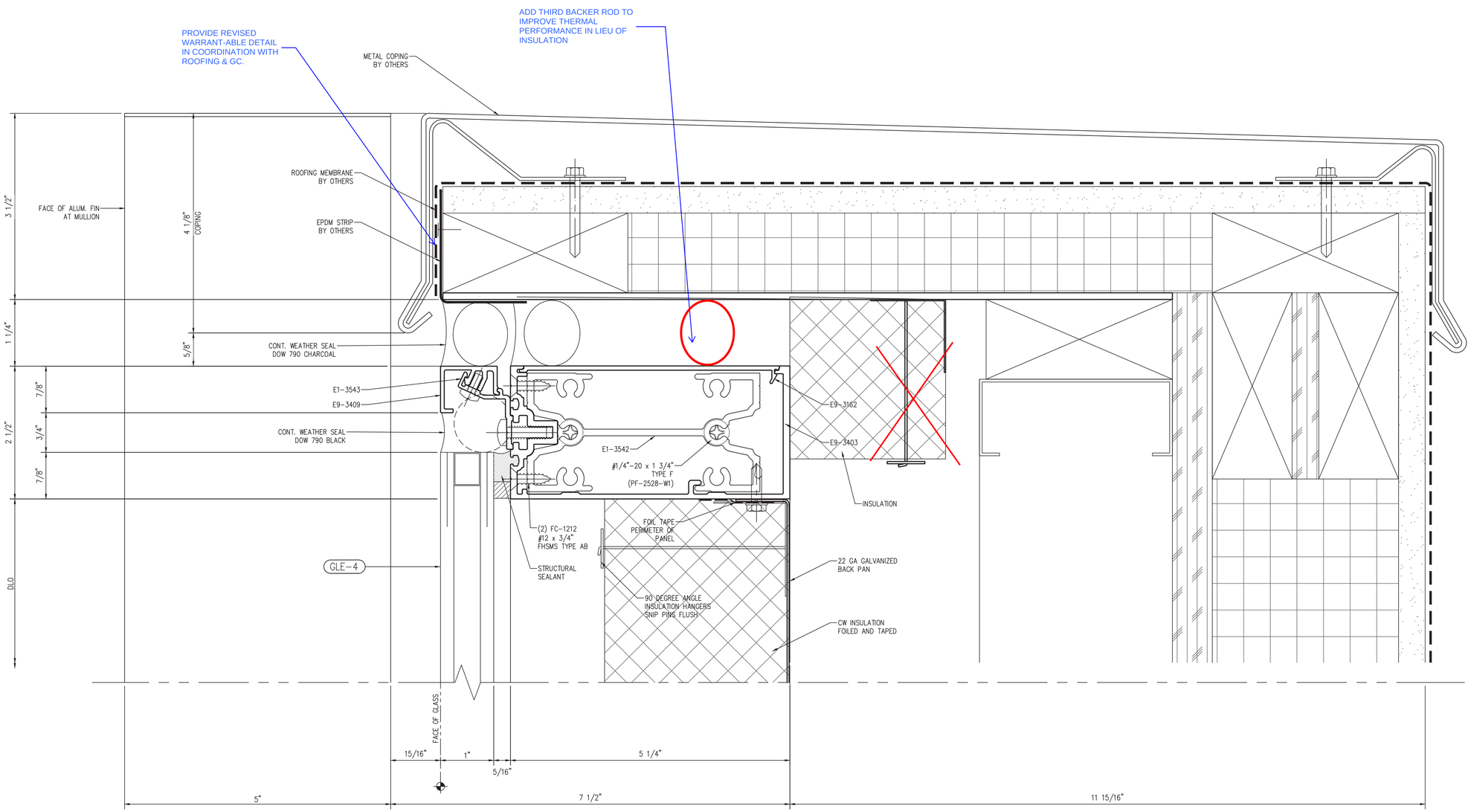

1 HEAD DETAIL

REF. 7/A0451

Scale: 1:1

NGG LTD

NGG LTD, INCORPORATED
1850 Craigshire Road Suite 202
St. Louis, Missouri 63146

Tel 314-336-2515
Fax 314-336-2521

Professional Seal

Sub. No.	Rev. No.	Date	Drawn By	Submitted/Revision Description
3	2	11/8/16	IY	3RD SUBMISSION
2	1	10/19/16	IY	2ND SUBMISSION
1	–	8/10/16	IY	1ST SUBMISSION

Proprietary Notice

This drawing sheet and contents herein are property of NGG. Use of this drawing, contents or design concepts for purposes other than estimating, drawing preparation and/or manufacturing for NGG shall be cause for legal recourse by NGG.

Project Name
WEBSTER UNIVERSITY
Location
St. Louis, Missouri

Architect
CANNON DESIGN
Location
St. Louis, MO

Contractor
PARIC
Location
St. Louis, Missouri

Owner
WEBSTER UNIVERSITY
Location
St. Louis, Missouri

Drawn Date	Scale
8/10/16	AS NOTED

NGG Project No.

Drawing Title
DETAILS

Drawn By	Sheet No.
IY	305

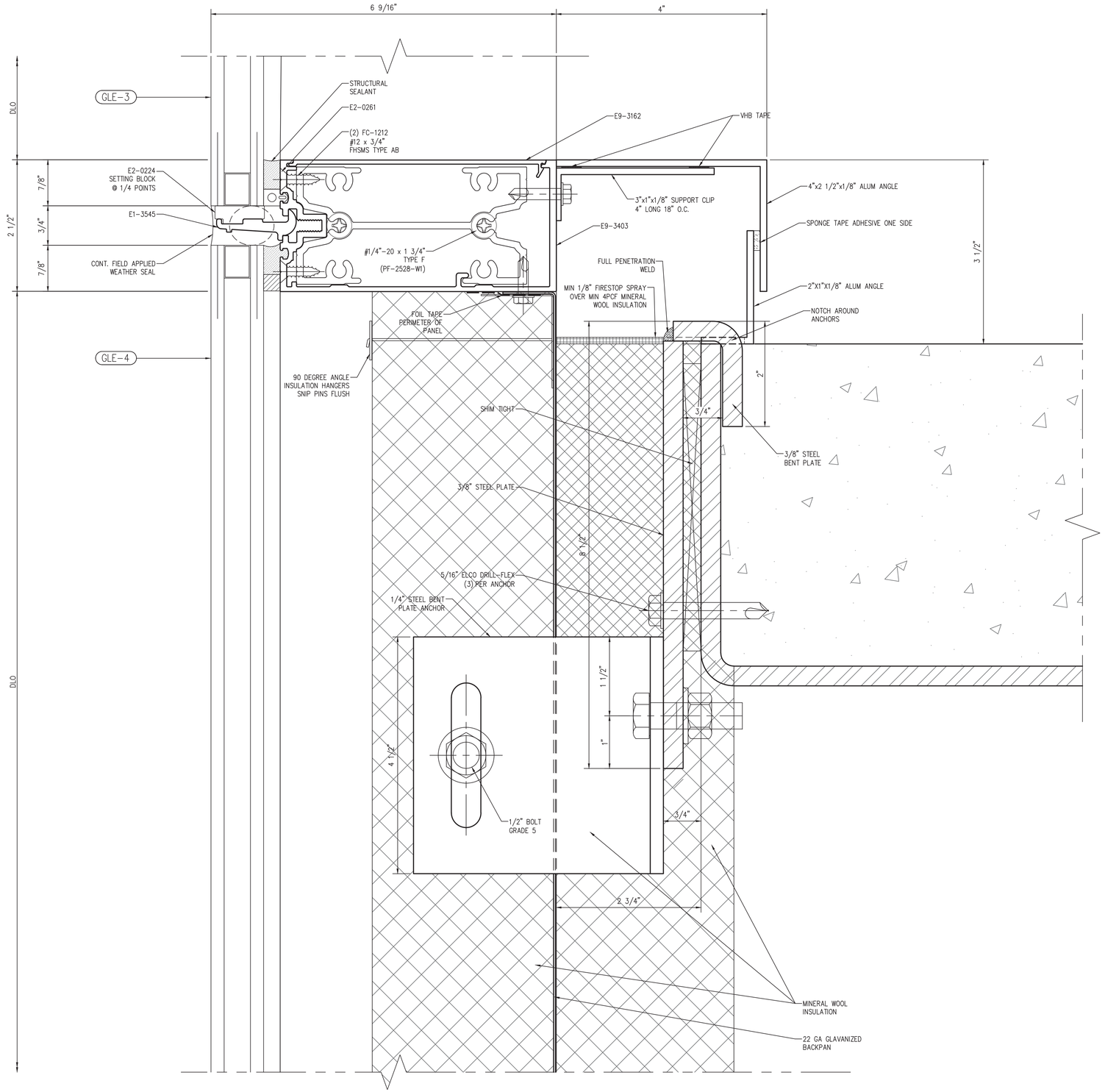

1 WIND LOAD ANCHOR

REF. 9/A0455 Scale: 1:1

NGG LTD

NGG LTD, INCORPORATED
1850 Craigshire Road Suite 202
St. Louis, Missouri 63146

Tel 314-336-2515
Fax 314-336-2521

Professional Seal

Sub. No.	Rev. No.	Date	Drawn By	Submitted/Revision Description
3	2	11/8/16	IY	3RD SUBMISSION
2	1	10/19/16	IY	2ND SUBMISSION
1	–	8/10/16	IY	1ST SUBMISSION

Proprietary Notice

This drawing sheet and contents herein are property of NGG. Use of this drawing, contents or design concepts for purposes other than estimating, drawing preparation and/or manufacturing for NGG shall be cause for legal recourse by NGG.

Project Name
WEBSTER UNIVERSITY
Location
St. Louis, Missouri

Architect
CANNON DESIGN
Location
St. Louis, MO

Contractor
PARIC
Location
St. Louis, Missouri

Owner
WEBSTER UNIVERSITY
Location
St. Louis, Missouri

Drawn Date	Scale
8/10/16	AS NOTED

NGG Project No.

Drawing Title
DETAILS

Drawn By	Sheet No.
IY	306

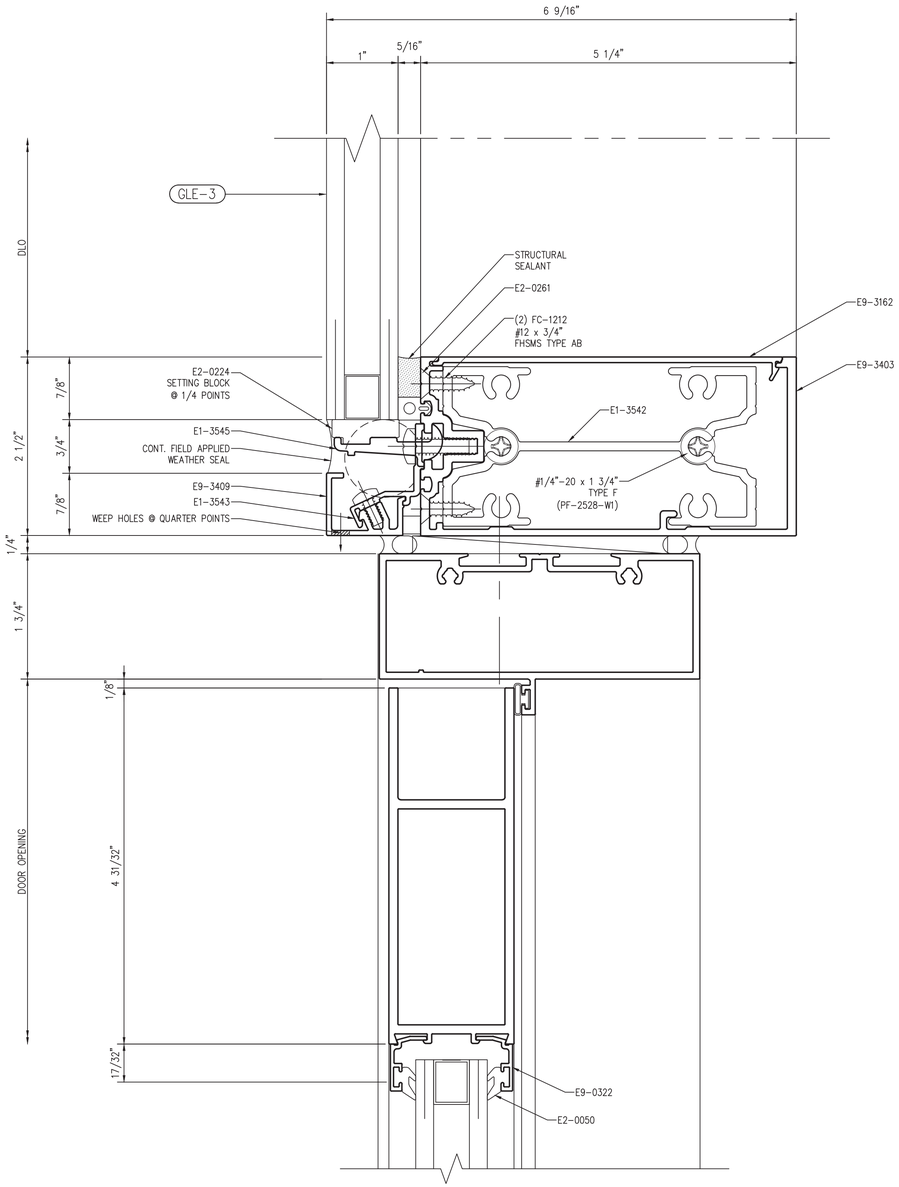

1 DOOR HEAD DETAIL
Scale: 1:1

NGG LTD

NGG LTD, INCORPORATED
1850 Craigshire Road Suite 202
St. Louis, Missouri 63146

Tel 314-336-2515
Fax 314-336-2521

Professional Seal

Sub. No.	Rev. No.	Date	Drawn By	Submitted/Revision Description
3	2	11/8/16	IY	3RD SUBMISSION
2	1	10/19/16	IY	2ND SUBMISSION
1	–	8/10/16	IY	1ST SUBMISSION

Proprietary Notice

This drawing sheet and contents herein are property of NGG. Use of this drawing, contents or design concepts for purposes other than estimating, drawing preparation and/or manufacturing for NGG shall be cause for legal recourse by NGG.

Project Name
WEBSTER UNIVERSITY
Location
St. Louis, Missouri

Architect
CANNON DESIGN
Location
St. Louis, MO

Contractor
PARIC
Location
St. Louis, Missouri

Owner
WEBSTER UNIVERSITY
Location
St. Louis, Missouri

Drawn Date	Scale
8/10/16	AS NOTED

NGG Project No.

Drawing Title
DETAILS

Drawn By	Sheet No.
IY	308

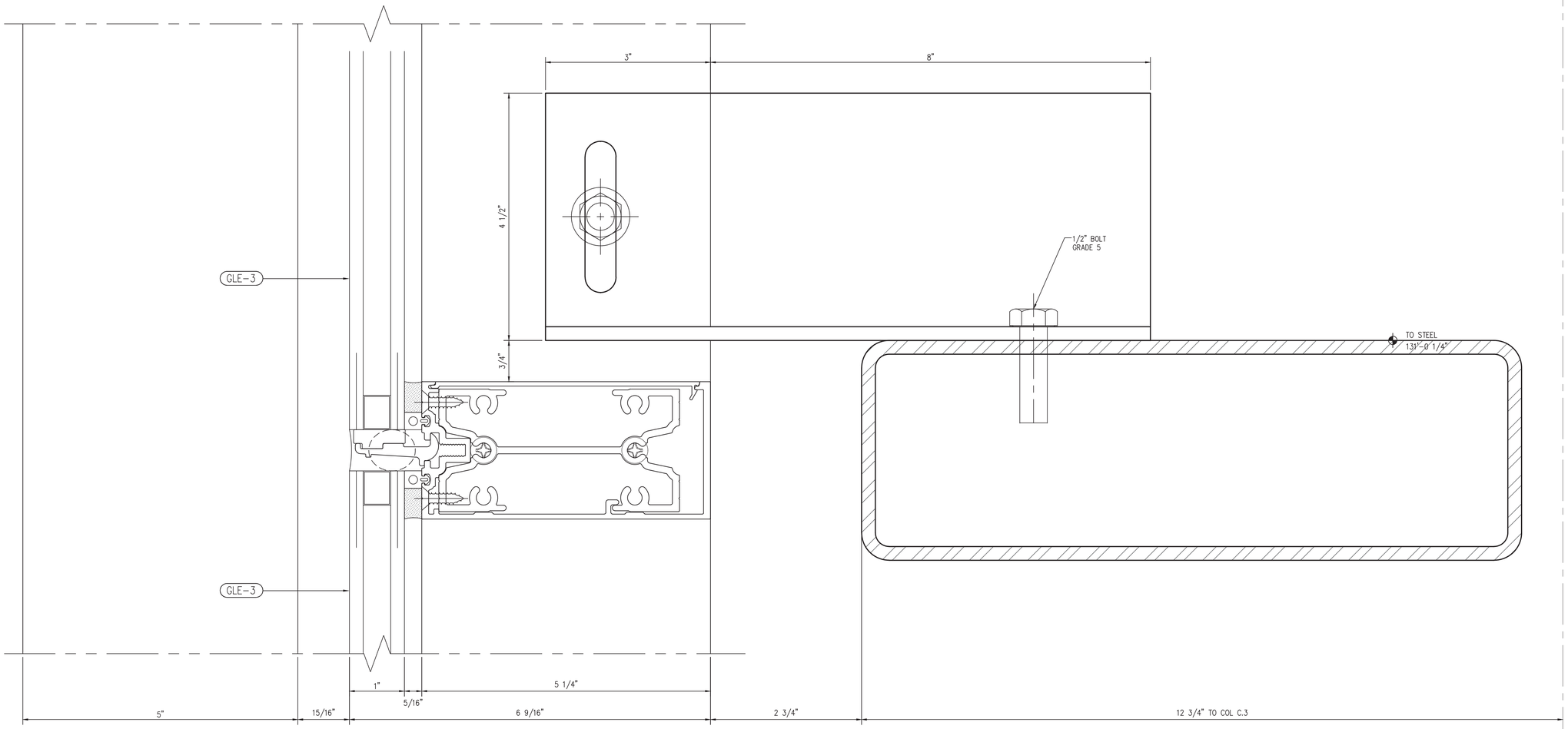

1 WIND LOAD ANCHOR

REF. 22/S303

Scale: 1:1

NGG LTD

NGG LTD, INCORPORATED
1850 Craigshire Road Suite 202
St. Louis, Missouri 63146

Tel 314-336-2515
Fax 314-336-2521

Professional Seal

Sub. No.	Rev. No.	Date	Drawn By	Submitted/Revision Description
3	2	11/8/16	IY	3RD SUBMISSION
2	1	10/19/16	IY	2ND SUBMISSION
1	–	8/10/16	IY	1ST SUBMISSION

Proprietary Notice

This drawing sheet and contents herein are property of NGG. Use of this drawing, contents or design concepts for purposes other than estimating, drawing preparation and/or manufacturing for NGG shall be cause for legal recourse by NGG.

Project Name
WEBSTER UNIVERSITY
Location
St. Louis, Missouri

Architect
CANNON DESIGN
Location
St. Louis, MO

Contractor
PARIC
Location
St. Louis, Missouri

Owner
WEBSTER UNIVERSITY
Location
St. Louis, Missouri

Drawn Date
8/10/16

Scale
AS NOTED

NGG Project No.

Drawing Title
DETAILS

Drawn By
IY

Sheet No.
309

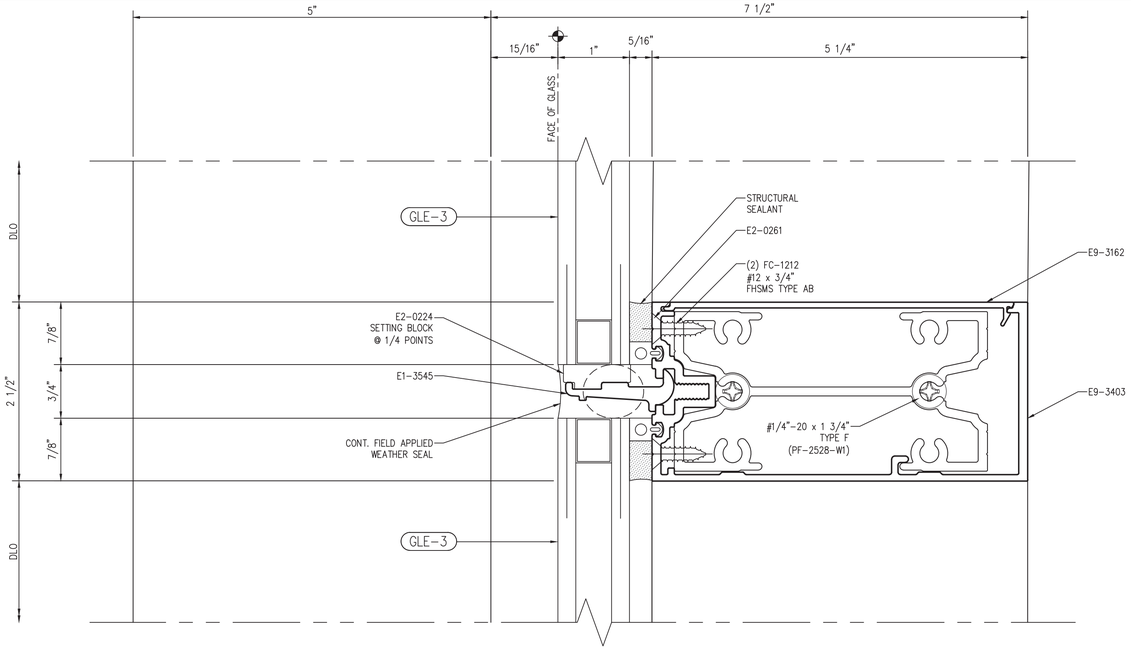

1 INTERMEDIATE HORIZONTAL

Scale: 1:1

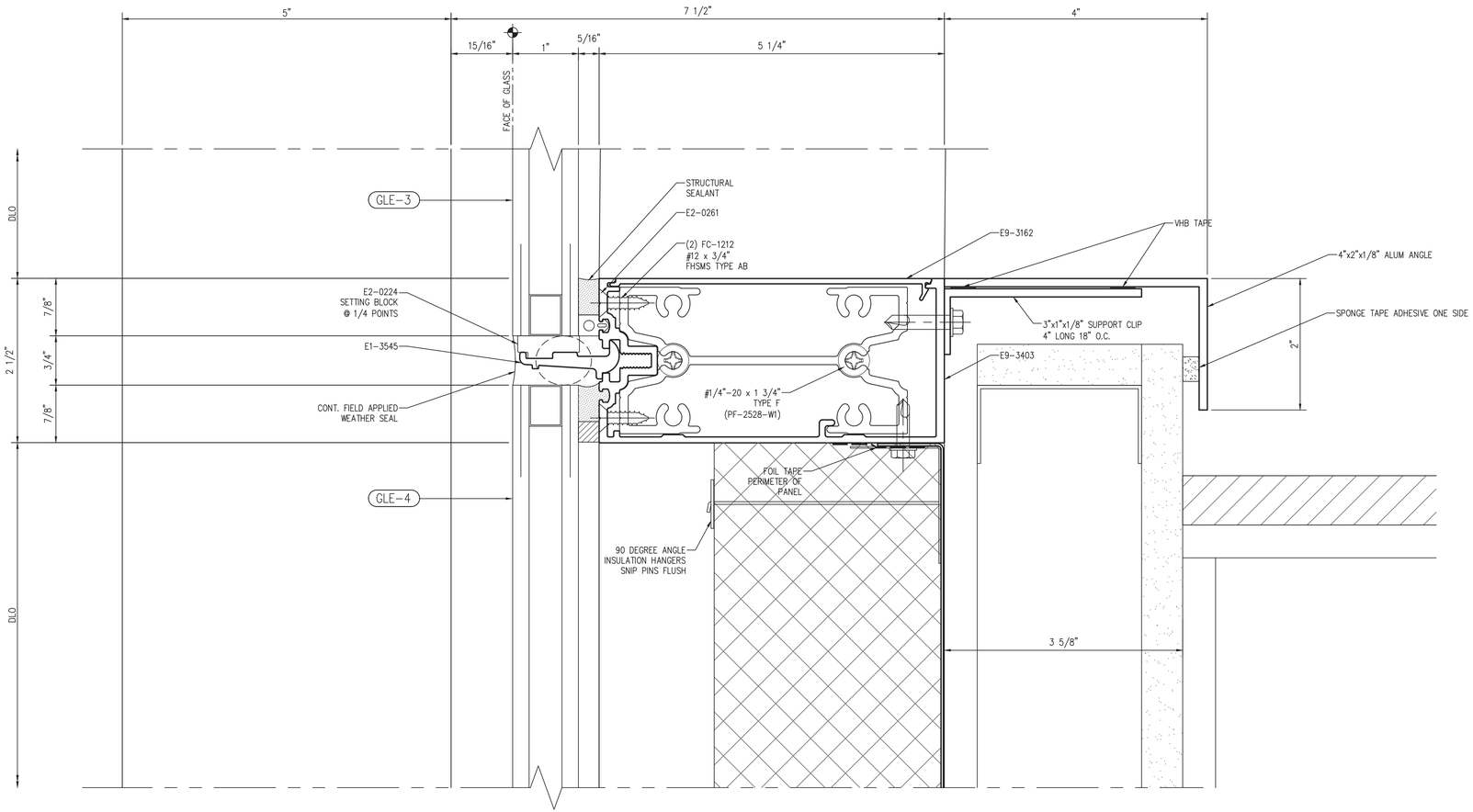

2 INTERMEDIATE HORIZONTAL

Scale: 1:1

NGG LTD

NGG LTD, INCORPORATED
1850 Craigshire Road Suite 202
St. Louis, Missouri 63146

Tel 314-336-2515
Fax 314-336-2521

Professional Seal

Sub. No.	Rev. No.	Date	Drawn By	Submitted/Revision Description
3	2	11/8/16	IY	3RD SUBMISSION
2	1	10/19/16	IY	2ND SUBMISSION
1	–	8/10/16	IY	1ST SUBMISSION

Proprietary Notice

This drawing sheet and contents herein are property of NGG. Use of this drawing, contents or design concepts for purposes other than estimating, drawing preparation and/or manufacturing for NGG shall be cause for legal recourse by NGG.

Project Name
WEBSTER UNIVERSITY
Location
St. Louis, Missouri

Architect
CANNON DESIGN
Location
St. Louis, MO

Contractor
PARIC
Location
St. Louis, Missouri

Owner
WEBSTER UNIVERSITY
Location
St. Louis, Missouri

Drawn Date	Scale
8/10/16	AS NOTED

NGG Project No.

Drawing Title
DETAILS

Drawn By	Sheet No.
IY	310

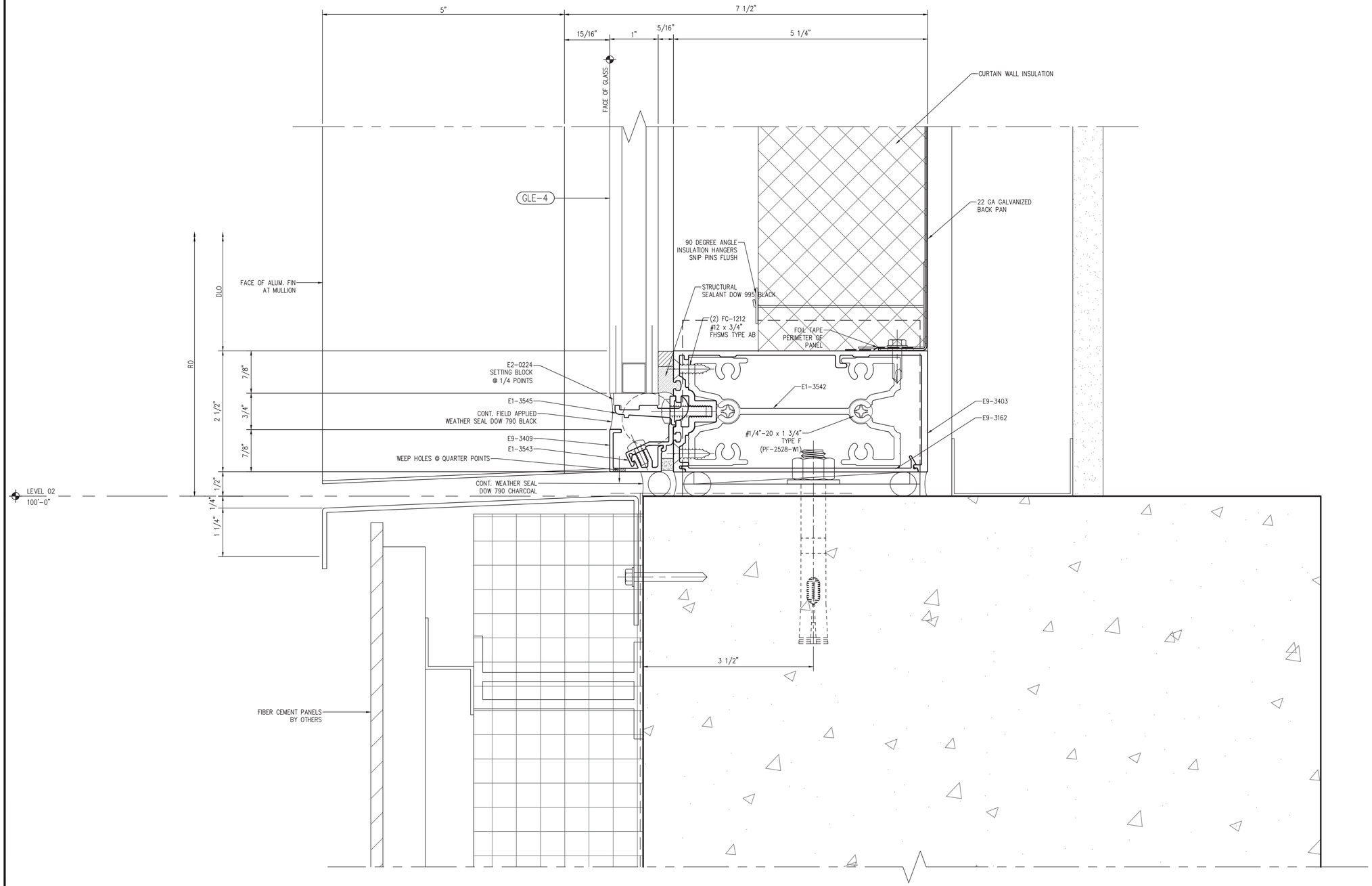

1 SILL DETAIL

REF. 1/A0451

Scale: 1:1

NGG LTD

NGG LTD, INCORPORATED
1850 Craigshire Road Suite 202
St. Louis, Missouri 63146

Tel 314-336-2515
Fax 314-336-2521

Professional Seal

Sub. No.	Rev. No.	Date	Drawn By	Submitted/Revision Description
3	2	11/8/16	IY	3RD SUBMISSION
2	1	10/19/16	IY	2ND SUBMISSION
1	–	8/10/16	IY	1ST SUBMISSION

Proprietary Notice

This drawing sheet and contents herein are property of NGG. Use of this drawing, contents or design concepts for purposes other than estimating, drawing preparation and/or manufacturing for NGG shall be cause for legal recourse by NGG.

Project Name
WEBSTER UNIVERSITY
Location
St. Louis, Missouri

Architect
CANNON DESIGN
Location
St. Louis, MO

Contractor
PARIC
Location
St. Louis, Missouri

Owner
WEBSTER UNIVERSITY
Location
St. Louis, Missouri

Drawn Date	Scale
8/10/16	AS NOTED

NGG Project No.

Drawing Title
DETAILS

Drawn By	Sheet No.
IY	311

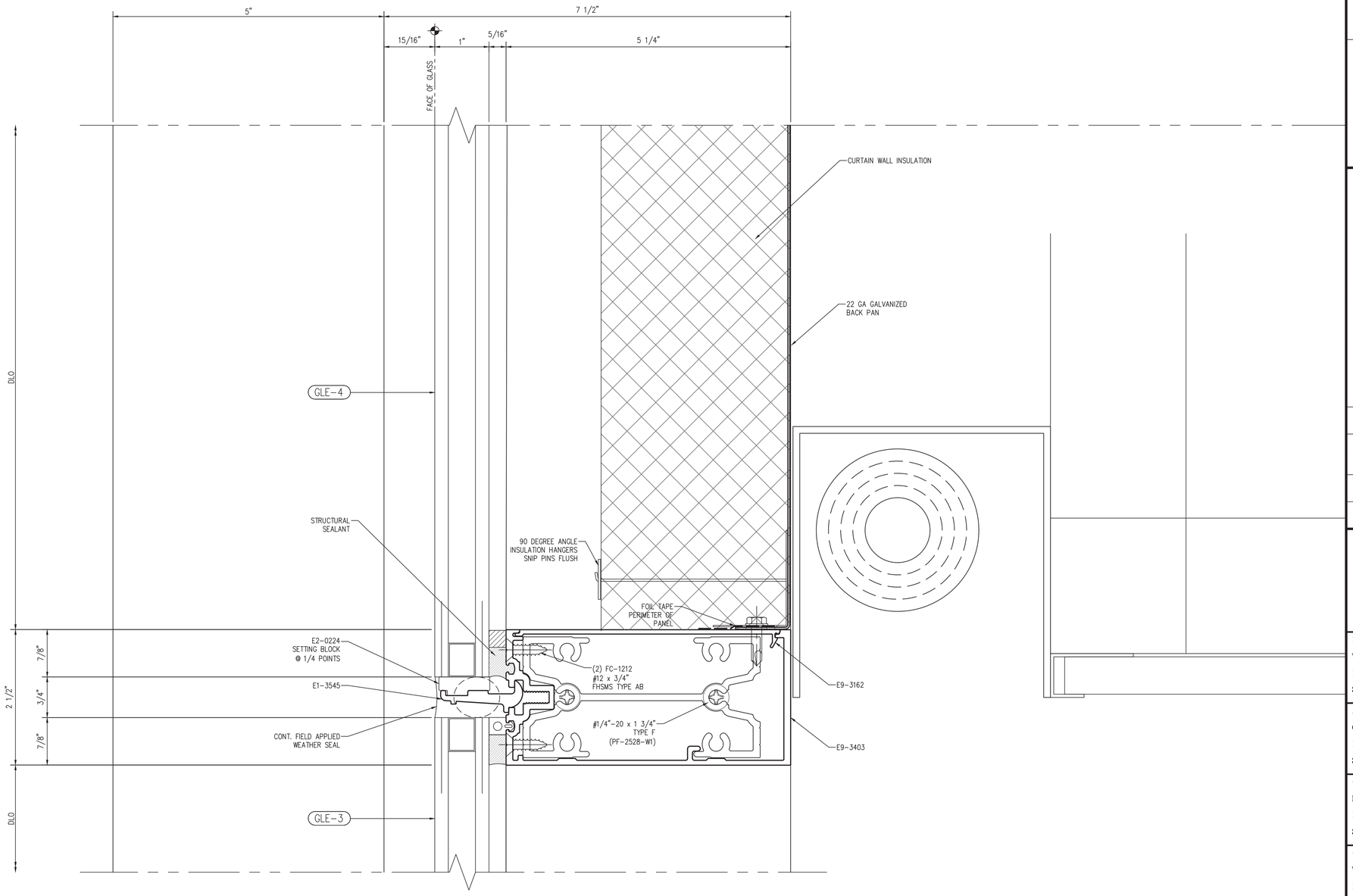

1 INTERMEDIATE HORIZONTAL

Scale: 1:1

NGG LTD

NGG LTD, INCORPORATED
1850 Craigshire Road Suite 202
St. Louis, Missouri 63146

Tel 314-336-2515
Fax 314-336-2521

Professional Seal

Sub. No.	Rev. No.	Date	Drawn By	Submitted/Revision Description
3	2	11/8/16	IY	3RD SUBMISSION
2	1	10/19/16	IY	2ND SUBMISSION
1	–	8/10/16	IY	1ST SUBMISSION

Proprietary Notice

This drawing sheet and contents herein are property of NGG. Use of this drawing, contents or design concepts for purposes other than estimating, drawing preparation and/or manufacturing for NGG shall be cause for legal recourse by NGG.

Project Name
WEBSTER UNIVERSITY
Location
St. Louis, Missouri

Architect
CANNON DESIGN
Location
St. Louis, MO

Contractor
PARIC
Location
St. Louis, Missouri

Owner
WEBSTER UNIVERSITY
Location
St. Louis, Missouri

Drawn Date	Scale
8/10/16	AS NOTED

NGG Project No.

Drawing Title
DETAILS

Drawn By	Sheet No.
IY	312

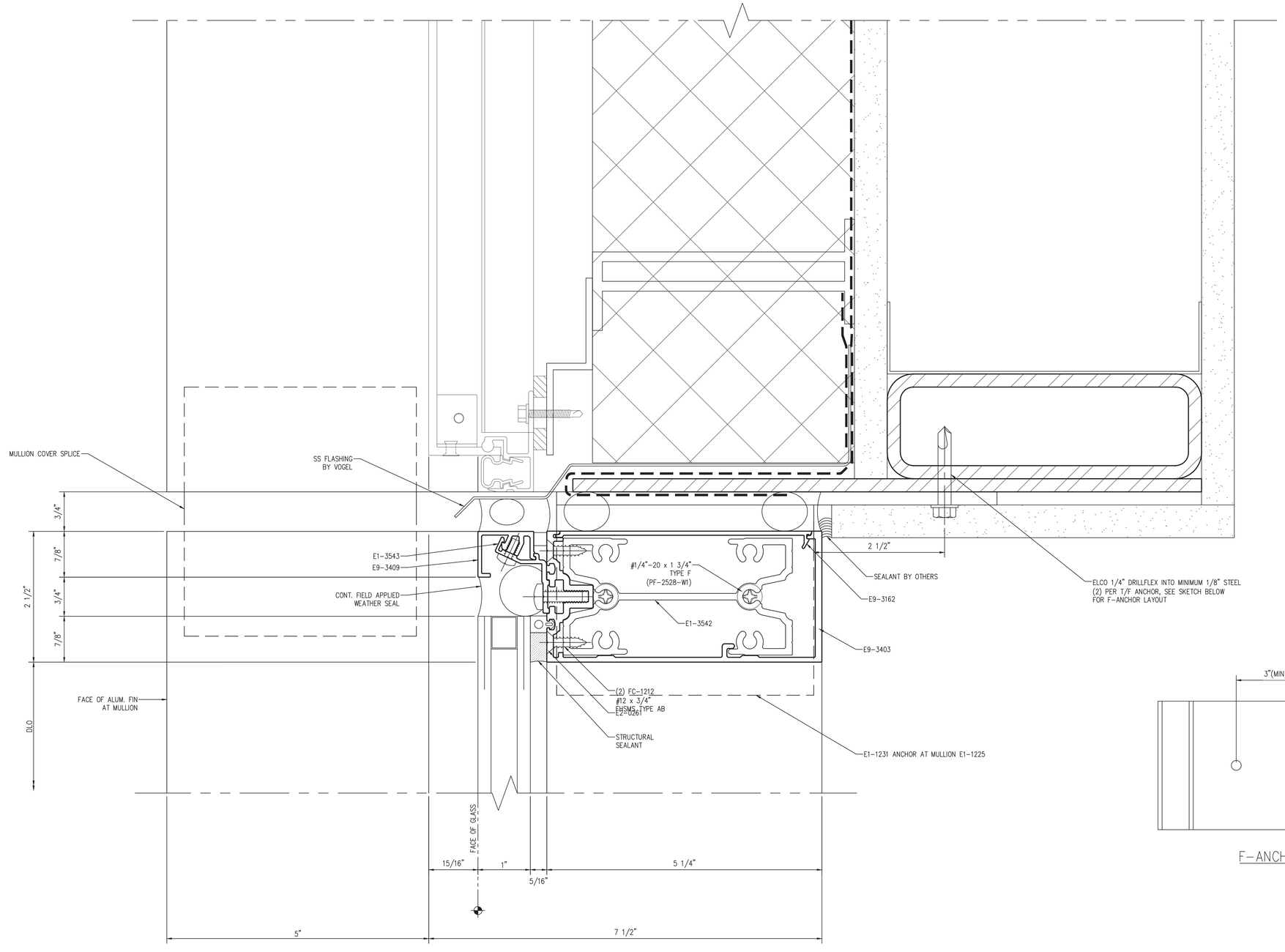

1 HEAD DETAIL

Scale: 1:1

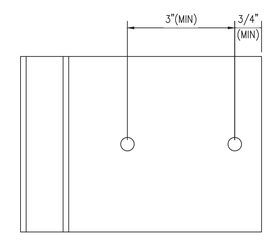

F-ANCHOR

NGG LTD

NGG LTD, INCORPORATED
1850 Craigshire Road Suite 202
St. Louis, Missouri 63146

Tel 314-336-2515
Fax 314-336-2521

Professional Seal

Sub. No.	Rev. No.	Date	Drawn By	Submitted/Revision Description
3	2	11/8/16	IY	3RD SUBMISSION
2	1	10/19/16	IY	2ND SUBMISSION
1	-	8/10/16	IY	1ST SUBMISSION

Proprietary Notice

This drawing sheet and contents herein are property of NGG. Use of this drawing, contents or design concepts for purposes other than estimating, drawing preparation and/or manufacturing for NGG shall be cause for legal recourse by NGG.

Project Name
WEBSTER UNIVERSITY
Location
St. Louis, Missouri

Architect
CANNON DESIGN
Location
St. Louis, MO

Contractor
PARIC
Location
St. Louis, Missouri

Owner
WEBSTER UNIVERSITY
Location
St. Louis, Missouri

Drawn Date	Scale
8/10/16	AS NOTED

NGG Project No.

Drawing Title
DETAILS

Drawn By	Sheet No.
IY	313

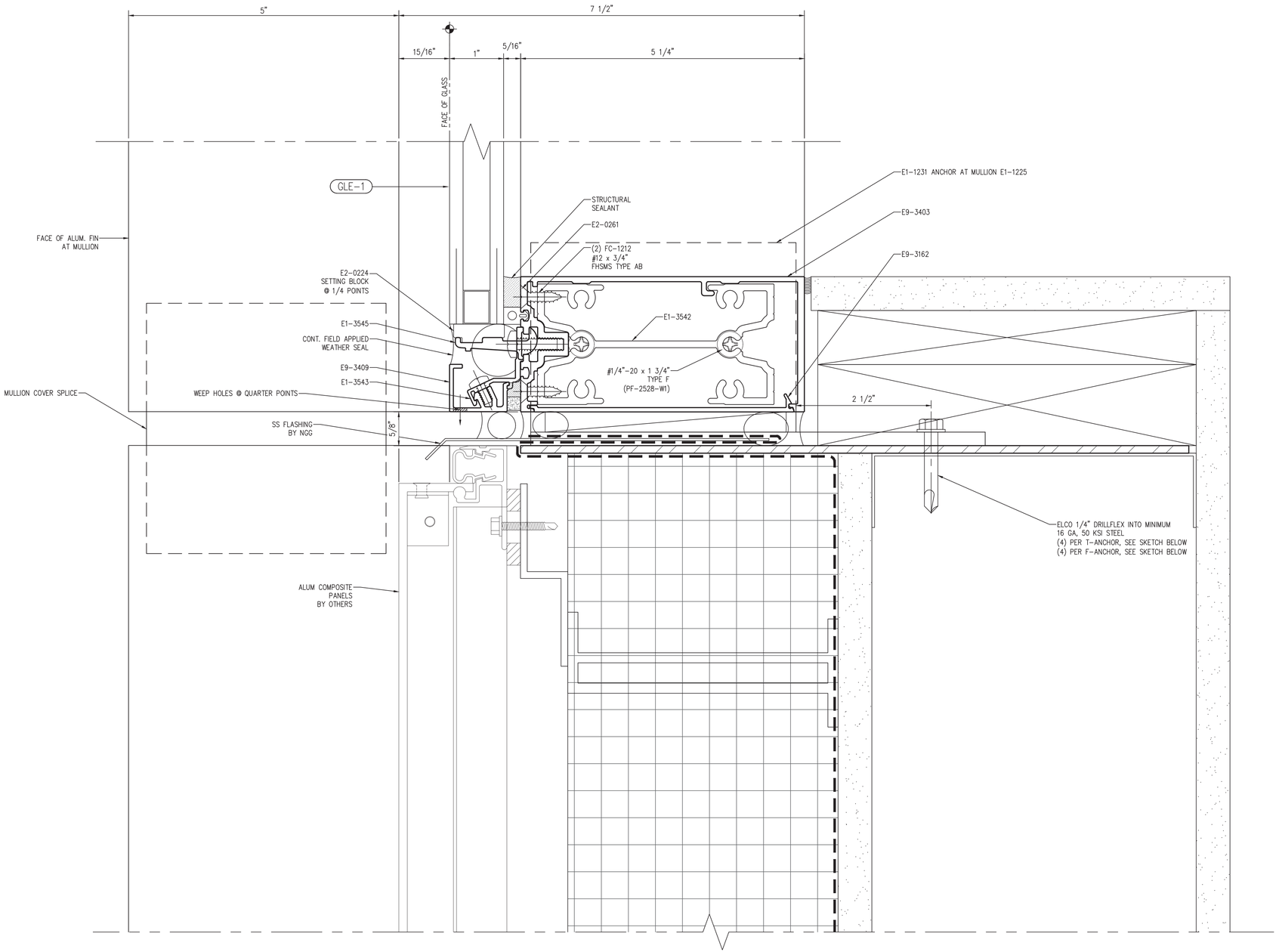

1 SILL DETAIL

Scale: 1:1

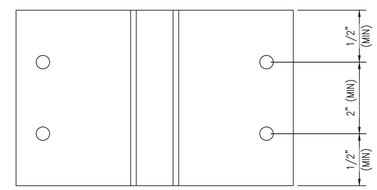

T-ANCHOR

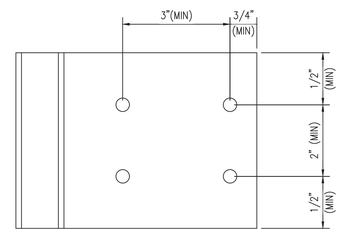

F-ANCHOR

NGG LTD

NGG LTD, INCORPORATED
1850 Craigshire Road Suite 202
St. Louis, Missouri 63146

Tel 314-336-2515
Fax 314-336-2521

Professional Seal

Sub. No.	Rev. No.	Date	Drawn By	Submitted/Revision Description
3	2	11/8/16	IY	3RD SUBMISSION
2	1	10/19/16	IY	2ND SUBMISSION
1	–	8/10/16	IY	1ST SUBMISSION

Proprietary Notice

This drawing sheet and contents herein are property of NGG. Use of this drawing, contents or design concepts for purposes other than estimating, drawing preparation and/or manufacturing for NGG shall be cause for legal recourse by NGG.

Project Name
WEBSTER UNIVERSITY
Location
St. Louis, Missouri

Architect
CANNON DESIGN
Location
St. Louis, MO

Contractor
PARIC
Location
St. Louis, Missouri

Owner
WEBSTER UNIVERSITY
Location
St. Louis, Missouri

Drawn Date	Scale
8/10/16	AS NOTED

NGG Project No.

Drawing Title
DETAILS

Drawn By	Sheet No.
IY	314

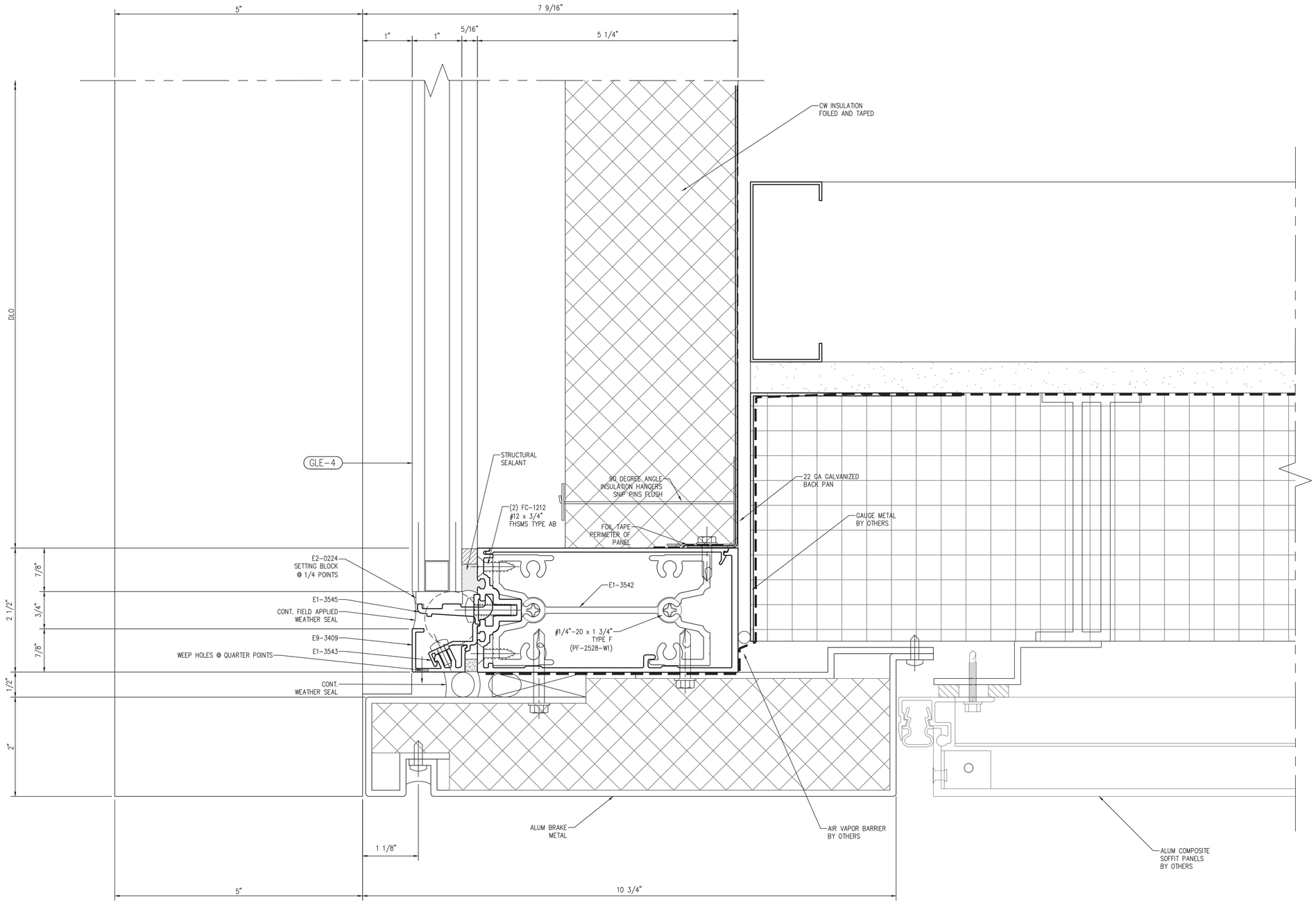

1 SILL DETAIL

Scale: 1:1

NGG LTD

NGG LTD, INCORPORATED
1850 Craigshire Road Suite 202
St. Louis, Missouri 63146

Tel 314-336-2515
Fax 314-336-2521

Professional Seal

Sub. No.	Rev. No.	Date	Drawn By	Submitted/Revision Description
3	2	11/8/16	IY	3RD SUBMISSION
2	1	10/19/16	IY	2ND SUBMISSION
1	–	8/10/16	IY	1ST SUBMISSION

Proprietary Notice

This drawing sheet and contents herein are property of NGG. Use of this drawing, contents or design concepts for purposes other than estimating, drawing preparation and/or manufacturing for NGG shall be cause for legal recourse by NGG.

Project Name
WEBSTER UNIVERSITY
Location
St. Louis, Missouri

Architect
CANNON DESIGN
Location
St. Louis, MO

Contractor
PARIC
Location
St. Louis, Missouri

Owner
WEBSTER UNIVERSITY
Location
St. Louis, Missouri

Drawn Date	Scale
8/10/16	AS NOTED

NGG Project No.

Drawing Title
DETAILS

Drawn By	Sheet No.
IY	315

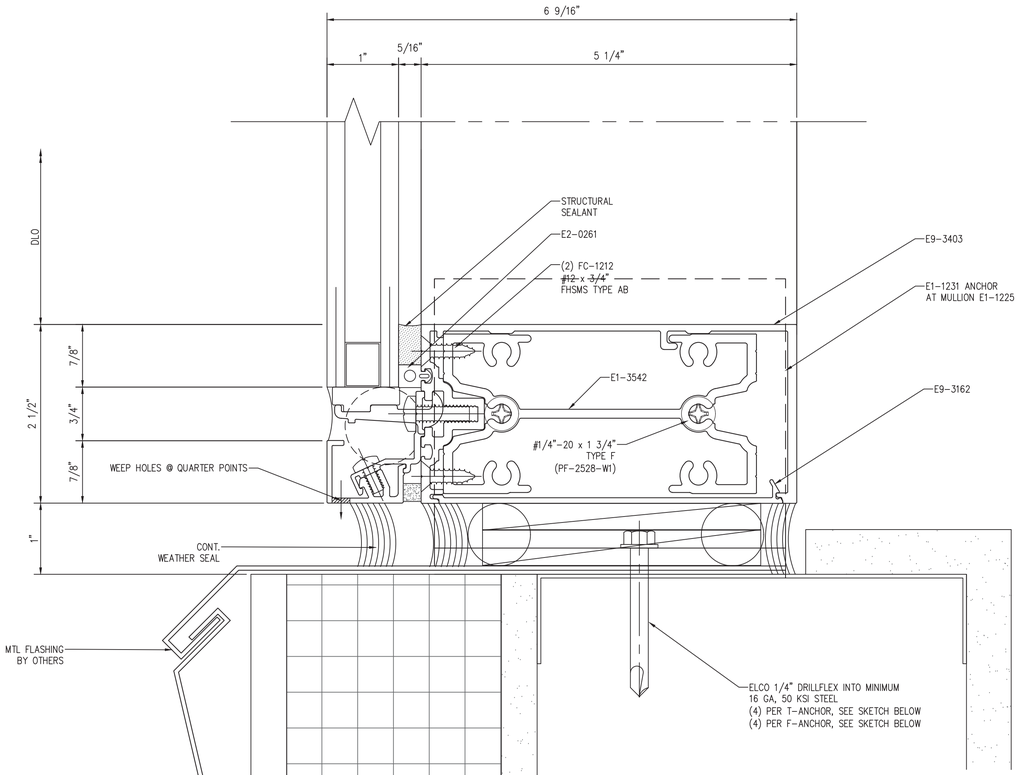

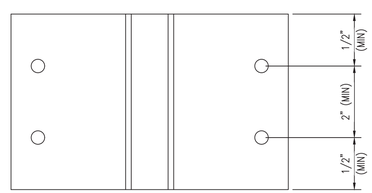

T-ANCHOR

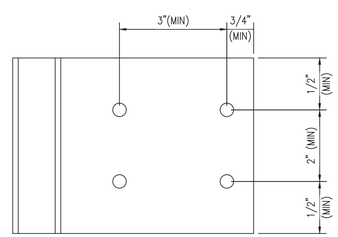

F-ANCHOR

1 SILL DETAIL

Scale: 1:1

REF. 4/A0453

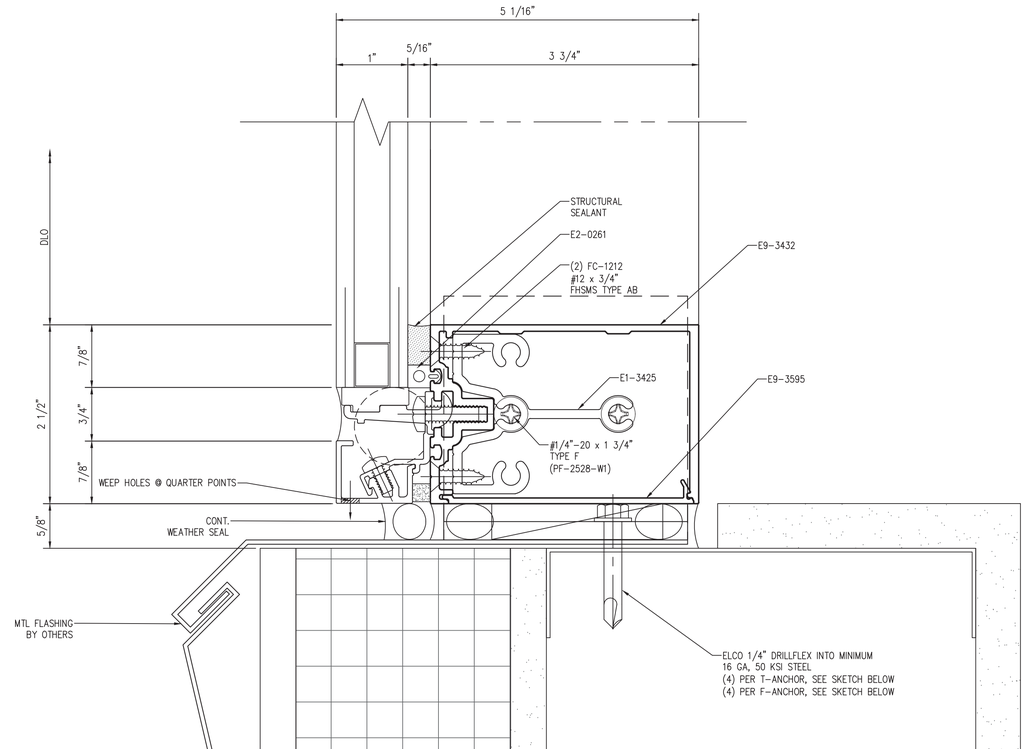

2 SILL DETAIL

Scale: 1:1

NGG LTD

NGG LTD, INCORPORATED
1850 Craigshire Road Suite 202
St. Louis, Missouri 63146

Tel 314-336-2515
Fax 314-336-2521

Professional Seal

Sub. No.	Rev. No.	Date	Drawn By	Submitted/Revision Description
3	2	11/8/16	IY	3RD SUBMISSION
2	1	10/19/16	IY	2ND SUBMISSION
1	–	8/10/16	IY	1ST SUBMISSION

Proprietary Notice

This drawing sheet and contents herein are property of NGG. Use of this drawing, contents or design concepts for purposes other than estimating, drawing preparation and/or manufacturing for NGG shall be cause for legal recourse by NGG.

Project Name
WEBSTER UNIVERSITY
Location
St. Louis, Missouri

Architect
CANNON DESIGN
Location
St. Louis, MO

Contractor
PARIC
Location
St. Louis, Missouri

Owner
WEBSTER UNIVERSITY
Location
St. Louis, Missouri

Drawn Date	Scale
8/10/16	AS NOTED

NGG Project No.

Drawing Title
DETAILS

Drawn By	Sheet No.
IY	316

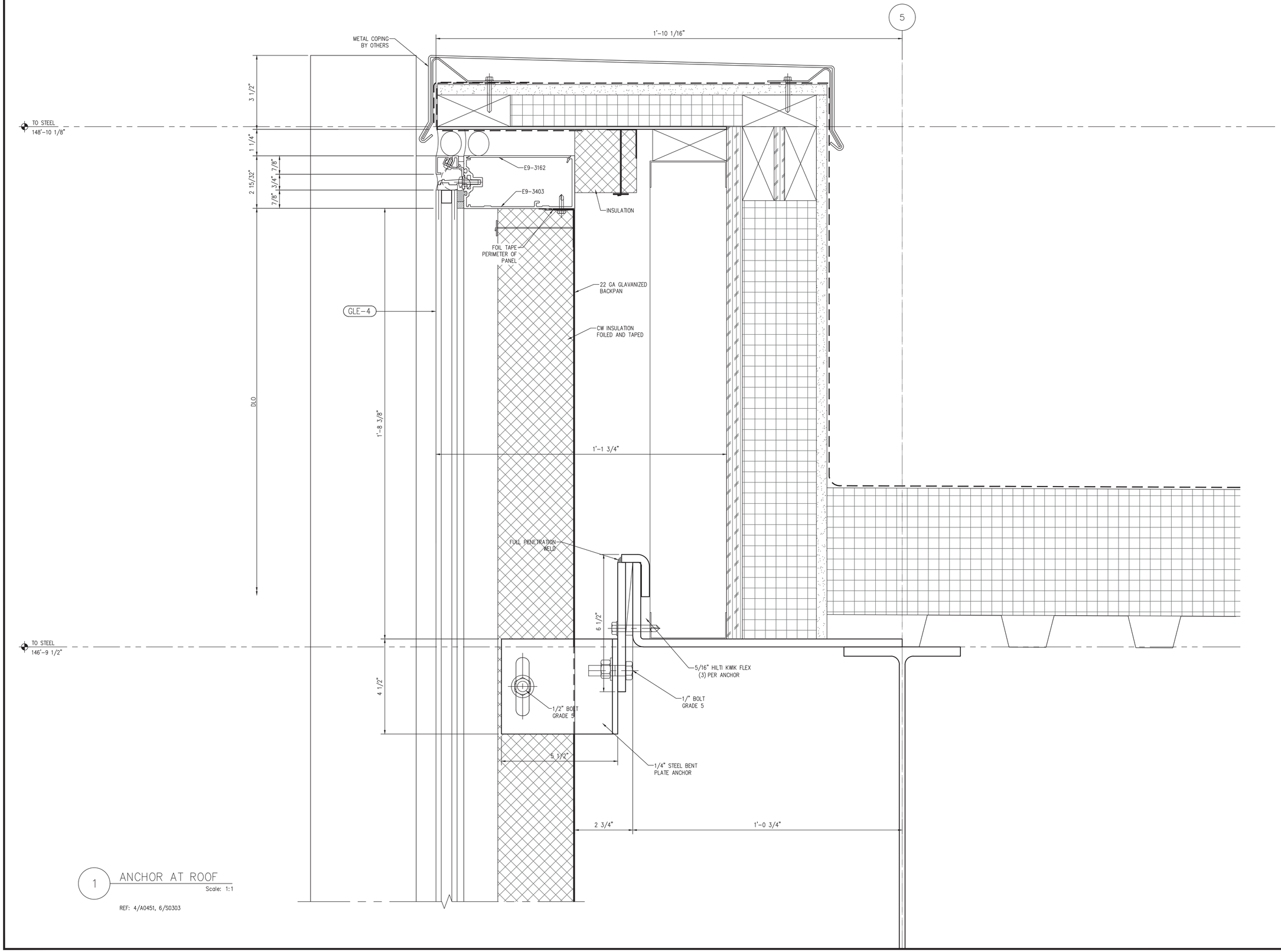

1 ANCHOR AT ROOF

Scale: 1:1

REF: 4/A0451, 6/S0303

NGG LTD

NGG LTD, INCORPORATED
1850 Craigshire Road Suite 202
St. Louis, Missouri 63146

Tel 314-336-2515
Fax 314-336-2521

Professional Seal

Sub. No.	Rev. No.	Date	Drawn By	Submitted/Revision Description
3	2	11/8/16	IY	3RD SUBMISSION
2	1	10/19/16	IY	2ND SUBMISSION
1	–	8/10/16	IY	1ST SUBMISSION

Proprietary Notice

This drawing sheet and contents herein are property of NGG. Use of this drawing, contents or design concepts for purposes other than estimating, drawing preparation and/or manufacturing for NGG shall be cause for legal recourse by NGG.

Project Name
WEBSTER UNIVERSITY
Location
St. Louis, Missouri

Architect
CANNON DESIGN
Location
St. Louis, MO

Contractor
PARIC
Location
St. Louis, Missouri

Owner
WEBSTER UNIVERSITY
Location
St. Louis, Missouri

Drawn Date	Scale
8/10/16	AS NOTED

NGG Project No.

Drawing Title
DETAILS

Drawn By	Sheet No.
IY	317

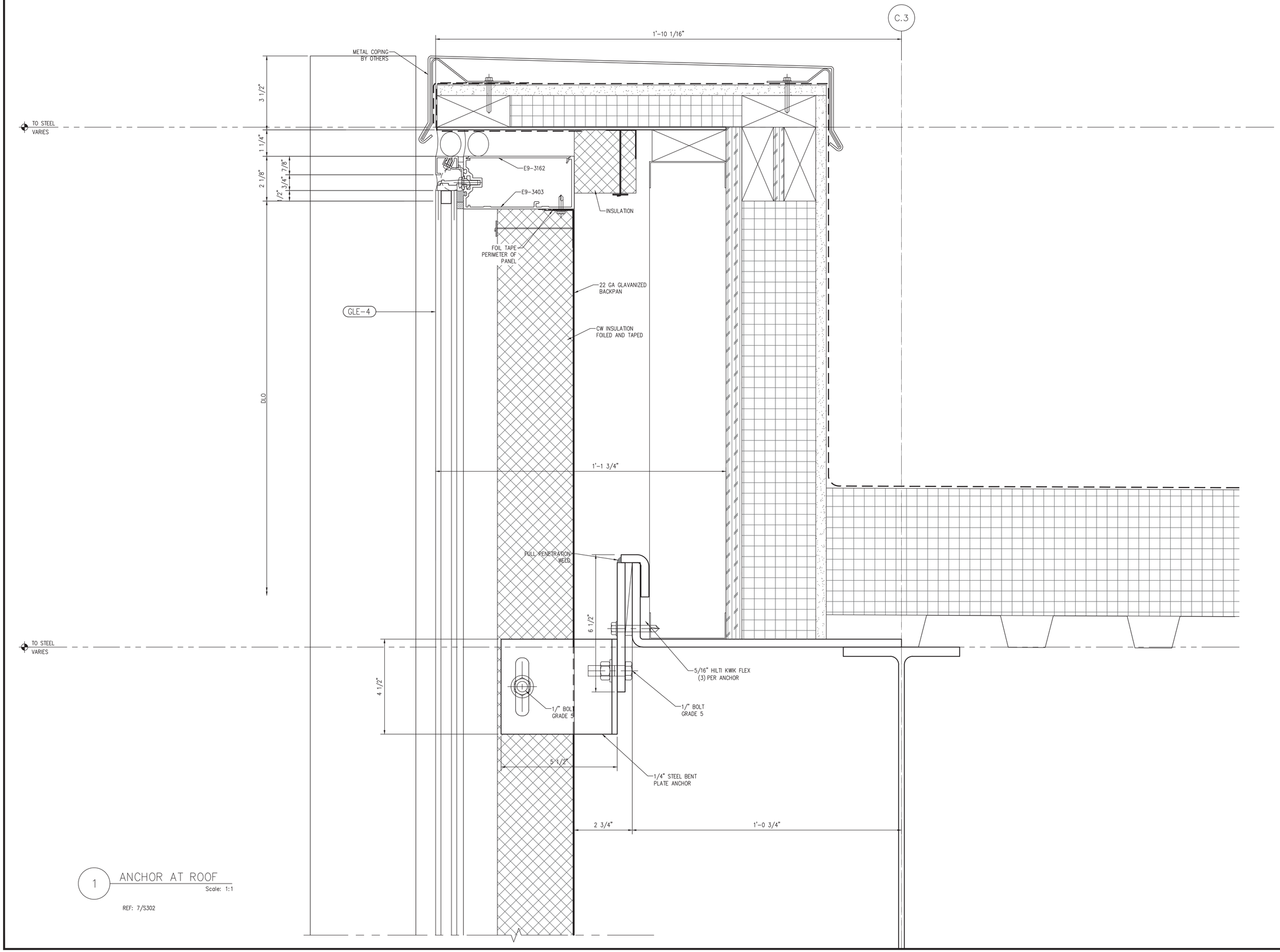

1 ANCHOR AT ROOF

Scale: 1:1

REF: 7/S302

NGG LTD

NGG LTD, INCORPORATED
1850 Craigshire Road Suite 202
St. Louis, Missouri 63146

Tel 314-336-2515
Fax 314-336-2521

Professional Seal

Sub. No.	Rev. No.	Date	Drawn By	Submitted/Revision Description
3	2	11/8/16	IY	3RD SUBMISSION
2	1	10/19/16	IY	2ND SUBMISSION
1	–	8/10/16	IY	1ST SUBMISSION

Proprietary Notice

This drawing sheet and contents herein are property of NGG. Use of this drawing, contents or design concepts for purposes other than estimating, drawing preparation and/or manufacturing for NGG shall be cause for legal recourse by NGG.

Project Name
WEBSTER UNIVERSITY
Location
St. Louis, Missouri

Architect
CANNON DESIGN
Location
St. Louis, MO

Contractor
PARIC
Location
St. Louis, Missouri

Owner
WEBSTER UNIVERSITY
Location
St. Louis, Missouri

Drawn Date	Scale
8/10/16	AS NOTED

NGG Project No.

Drawing Title
DETAILS

Drawn By	Sheet No.
IY	318

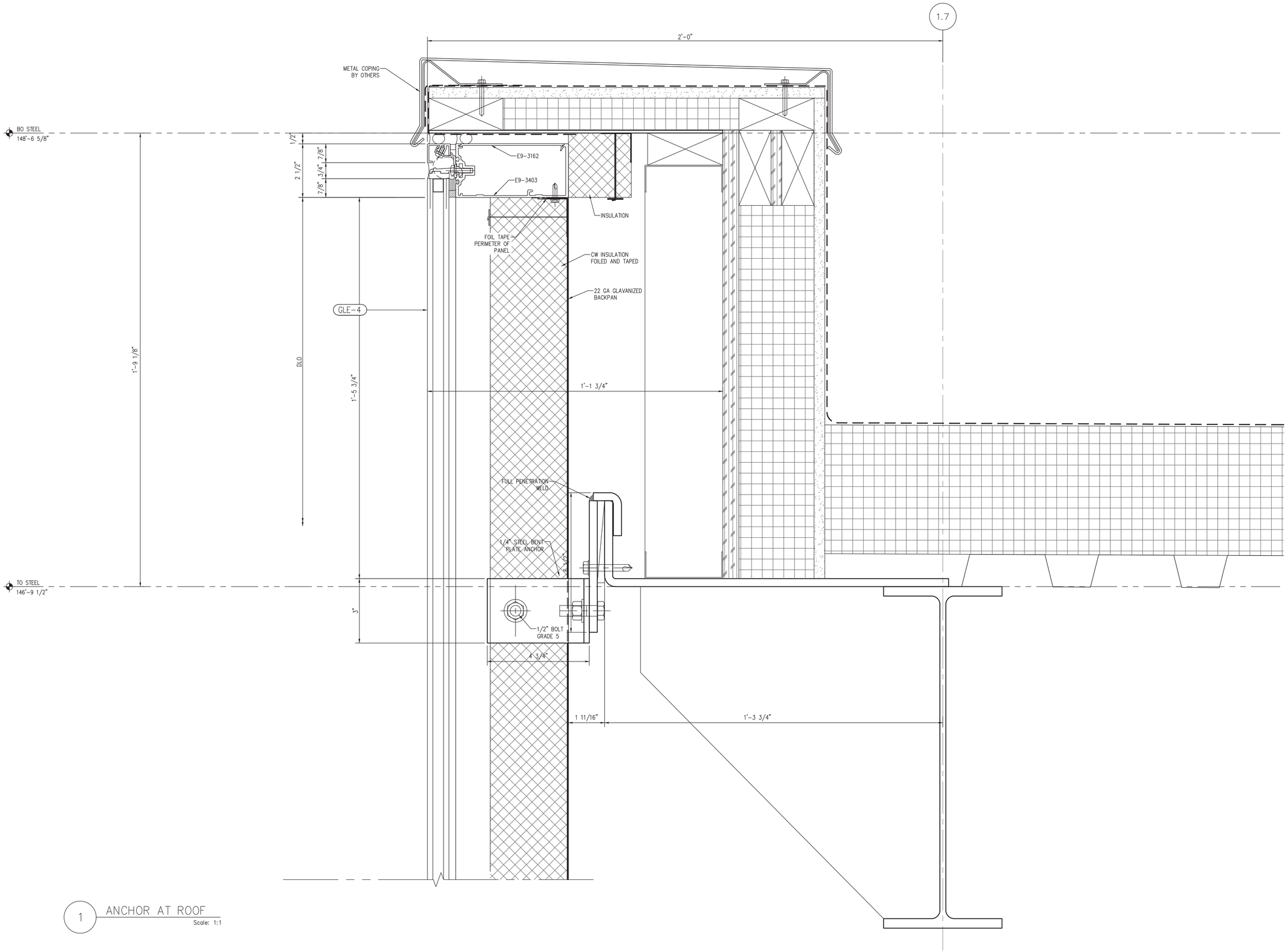

1 ANCHOR AT ROOF
Scale: 1:1

NGG LTD

NGG LTD, INCORPORATED
1850 Craigshire Road Suite 202
St. Louis, Missouri 63146

Tel 314-336-2515
Fax 314-336-2521

Professional Seal

Sub. No.	Rev. No.	Date	Drawn By	Submitted/Revision Description
3	2	11/8/16	IY	3RD SUBMISSION
2	1	10/19/16	IY	2ND SUBMISSION
1	–	8/10/16	IY	1ST SUBMISSION

Proprietary Notice

This drawing sheet and contents herein are property of NGG. Use of this drawing, contents or design concepts for purposes other than estimating, drawing preparation and/or manufacturing for NGG shall be cause for legal recourse by NGG.

Project Name
WEBSTER UNIVERSITY
Location
St. Louis, Missouri

Architect
CANNON DESIGN
Location
St. Louis, MO

Contractor
PARIC
Location
St. Louis, Missouri

Owner
WEBSTER UNIVERSITY
Location
St. Louis, Missouri

Drawn Date	Scale
8/10/16	AS NOTED

NGG Project No.

Drawing Title
DETAILS

Drawn By	Sheet No.
IY	319

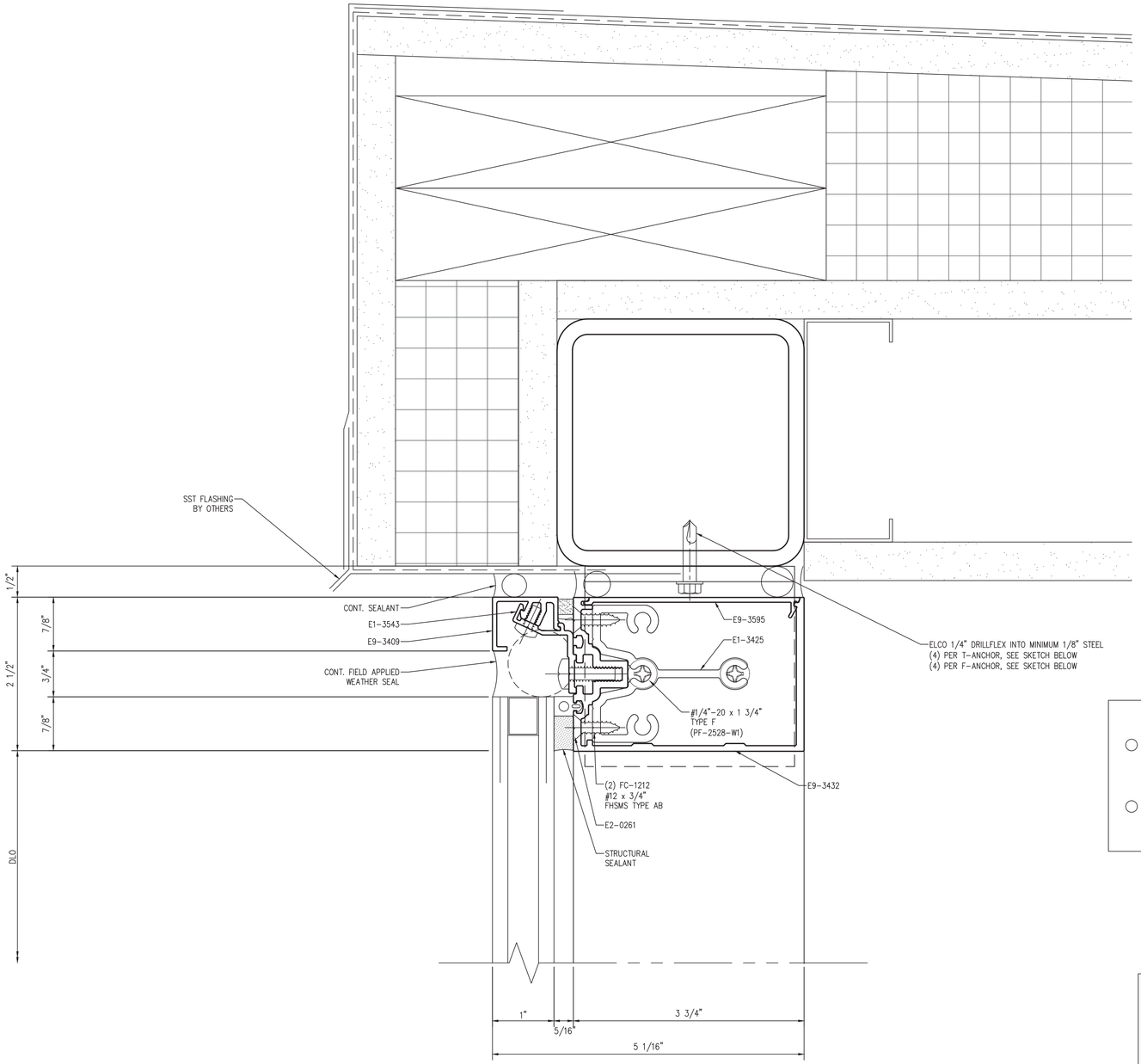

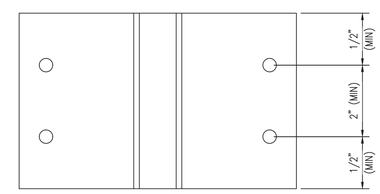

T-ANCHOR

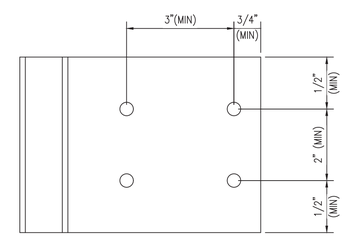

F-ANCHOR

1 HEAD DETAIL

REF. 7/A0451 Scale: 1:1

NGG LTD

NGG LTD, INCORPORATED
1850 Craigshire Road Suite 202
St. Louis, Missouri 63146

Tel 314-336-2515
Fax 314-336-2521

Professional Seal

Sub. No.	Rev. No.	Date	Drawn By	Submitted/Revision Description
3	2	11/8/16	IY	3RD SUBMISSION
2	1	10/19/16	IY	2ND SUBMISSION
1	–	8/10/16	IY	1ST SUBMISSION

Proprietary Notice

This drawing sheet and contents herein are property of NGG. Use of this drawing, contents or design concepts for purposes other than estimating, drawing preparation and/or manufacturing for NGG shall be cause for legal recourse by NGG.

Project Name
WEBSTER UNIVERSITY
Location
St. Louis, Missouri

Architect
CANNON DESIGN
Location
St. Louis, MO

Contractor
PARIC
Location
St. Louis, Missouri

Owner
WEBSTER UNIVERSITY
Location
St. Louis, Missouri

Drawn Date: 8/10/16

Scale: AS NOTED

NGG Project No.

Drawing Title
DETAILS

Drawn By: IY

Sheet No. 320

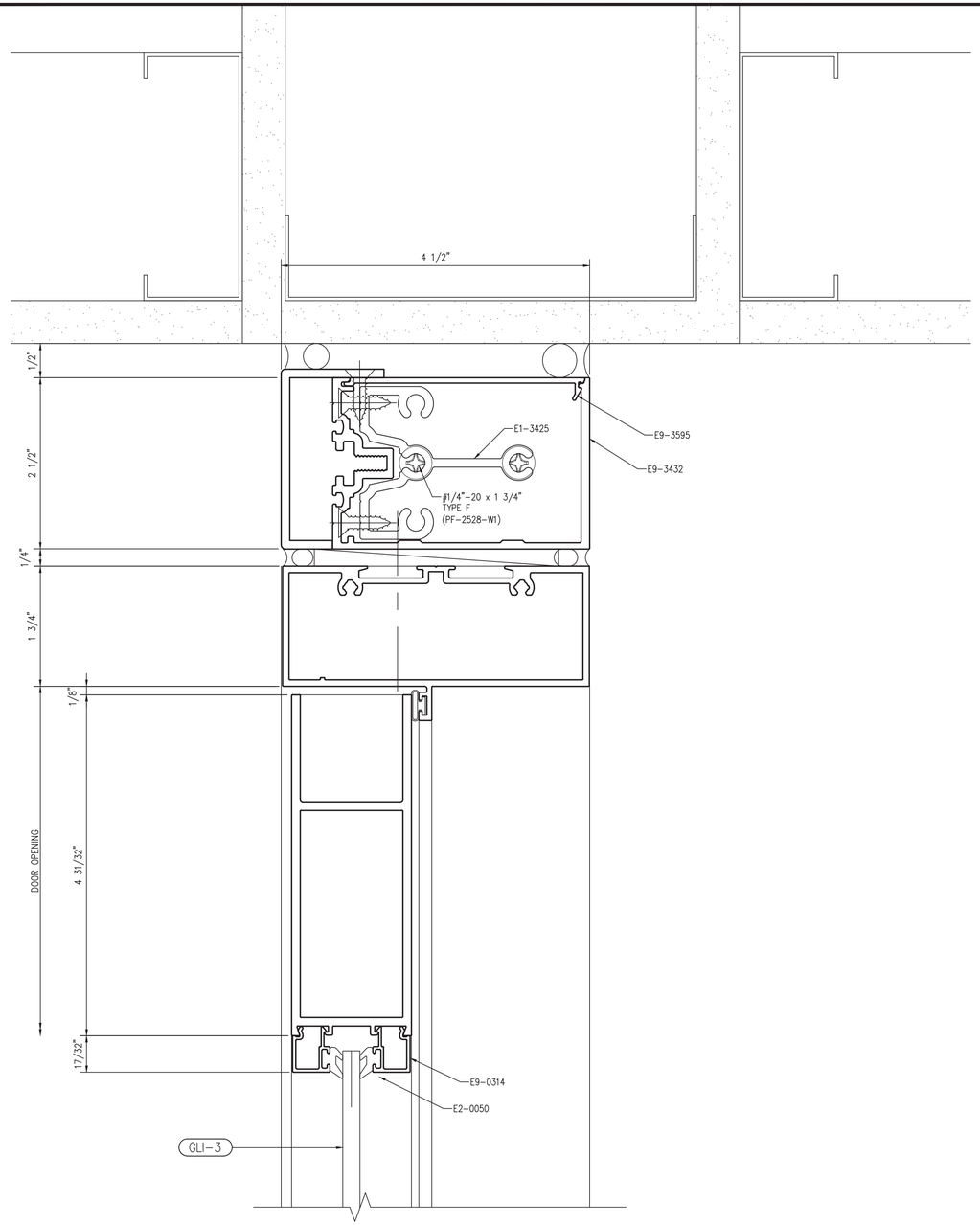

1 DOOR HEAD

Scale: 1:1

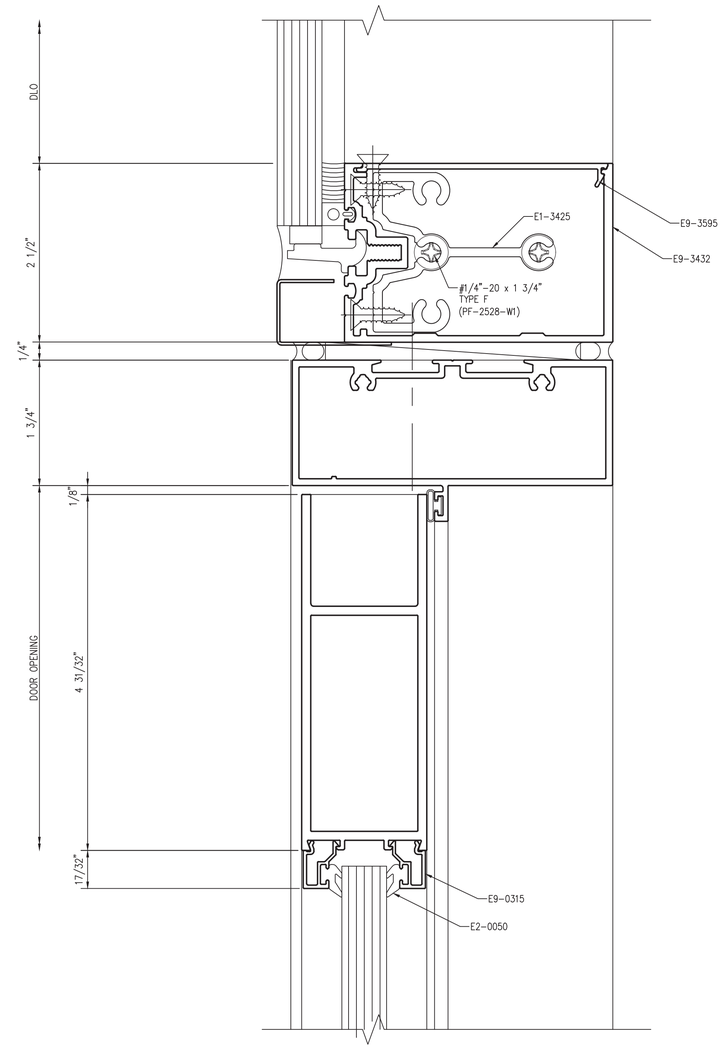

2 DOOR HEAD

Scale: 1:1

NGG LTD

NGG LTD, INCORPORATED
1850 Craigshire Road Suite 202
St. Louis, Missouri 63146

Tel 314-336-2515
Fax 314-336-2521

Professional Seal

Sub. No.	Rev. No.	Date	Drawn By	Submitted/Revision Description
3	2	11/8/16	IY	3RD SUBMISSION
2	1	10/19/16	IY	2ND SUBMISSION
1	–	8/10/16	IY	1ST SUBMISSION

Proprietary Notice

This drawing sheet and contents herein are property of NGG. Use of this drawing, contents or design concepts for purposes other than estimating, drawing preparation and/or manufacturing for NGG shall be cause for legal recourse by NGG.

Project Name
WEBSTER UNIVERSITY
Location
St. Louis, Missouri

Architect
CANNON DESIGN
Location
St. Louis, MO

Contractor
PARIC
Location
St. Louis, Missouri

Owner
WEBSTER UNIVERSITY
Location
St. Louis, Missouri

Drawn Date	Scale
8/10/16	AS NOTED

NGG Project No.

Drawing Title
DETAILS

Drawn By	Sheet No.
IY	321

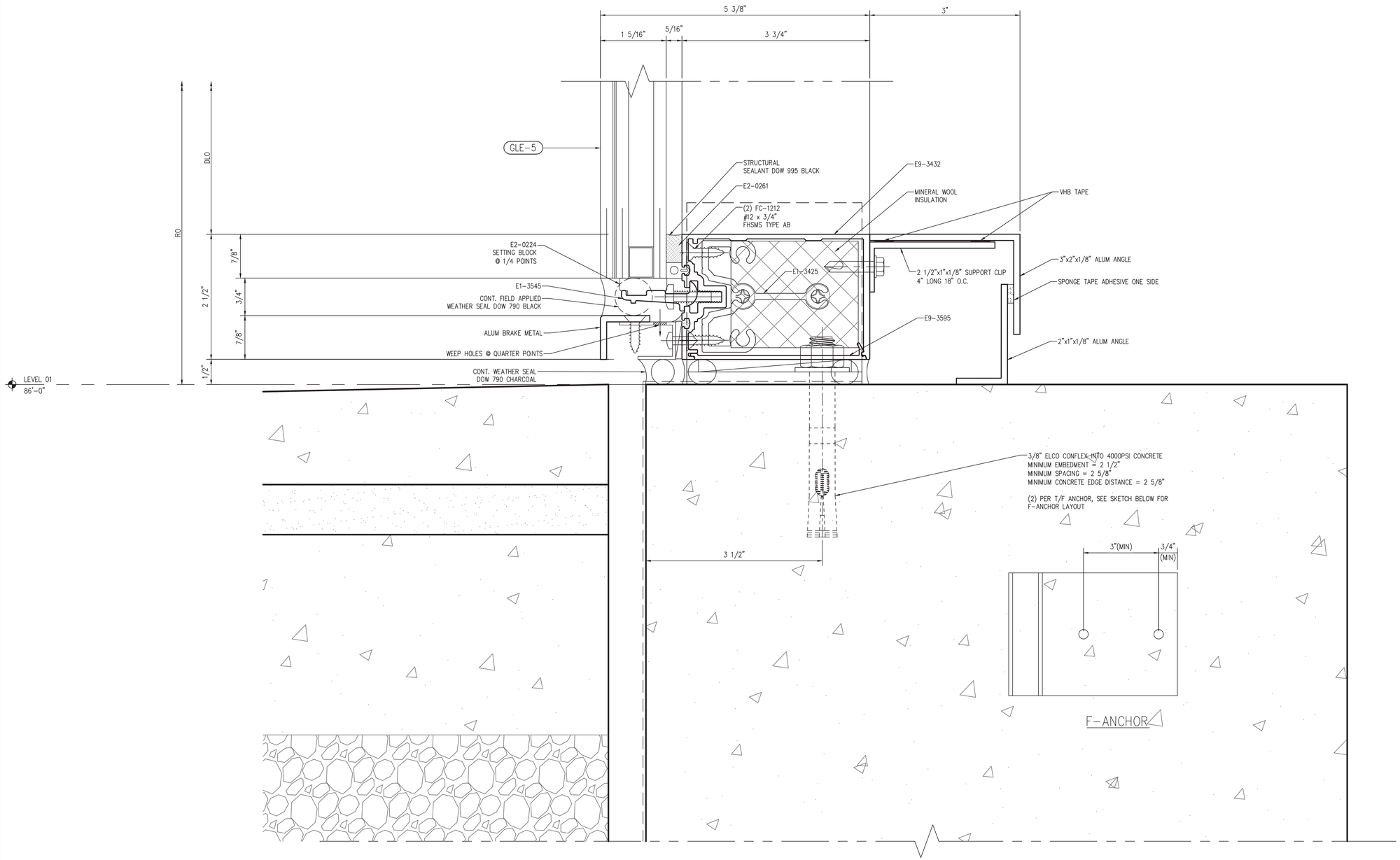

1 SILL DETAIL

Scale: 1:1

NGG LTD

NGG LTD, INCORPORATED
1850 Craigshire Road Suite 202
St. Louis, Missouri 63146

Tel 314-336-2515
Fax 314-336-2521

Professional Seal

Sub. No.	Rev. No.	Date	Drawn By	Submitted/Revision Description
3	2	11/8/16	IY	3RD SUBMISSION
2	1	10/19/16	IY	2ND SUBMISSION
1	–	8/10/16	IY	1ST SUBMISSION

Proprietary Notice

This drawing sheet and contents herein are property of NGG. Use of this drawing, contents or design concepts for purposes other than estimating, drawing preparation and/or manufacturing for NGG shall be cause for legal recourse by NGG.

Project Name
WEBSTER UNIVERSITY
Location
St. Louis, Missouri

Architect
CANNON DESIGN
Location
St. Louis, MO

Contractor
PARIC
Location
St. Louis, Missouri

Owner
WEBSTER UNIVERSITY
Location
St. Louis, Missouri

Drawn Date	Scale
8/10/16	AS NOTED

NGG Project No.

Drawing Title
DETAILS

Drawn By	Sheet No.
IY	322

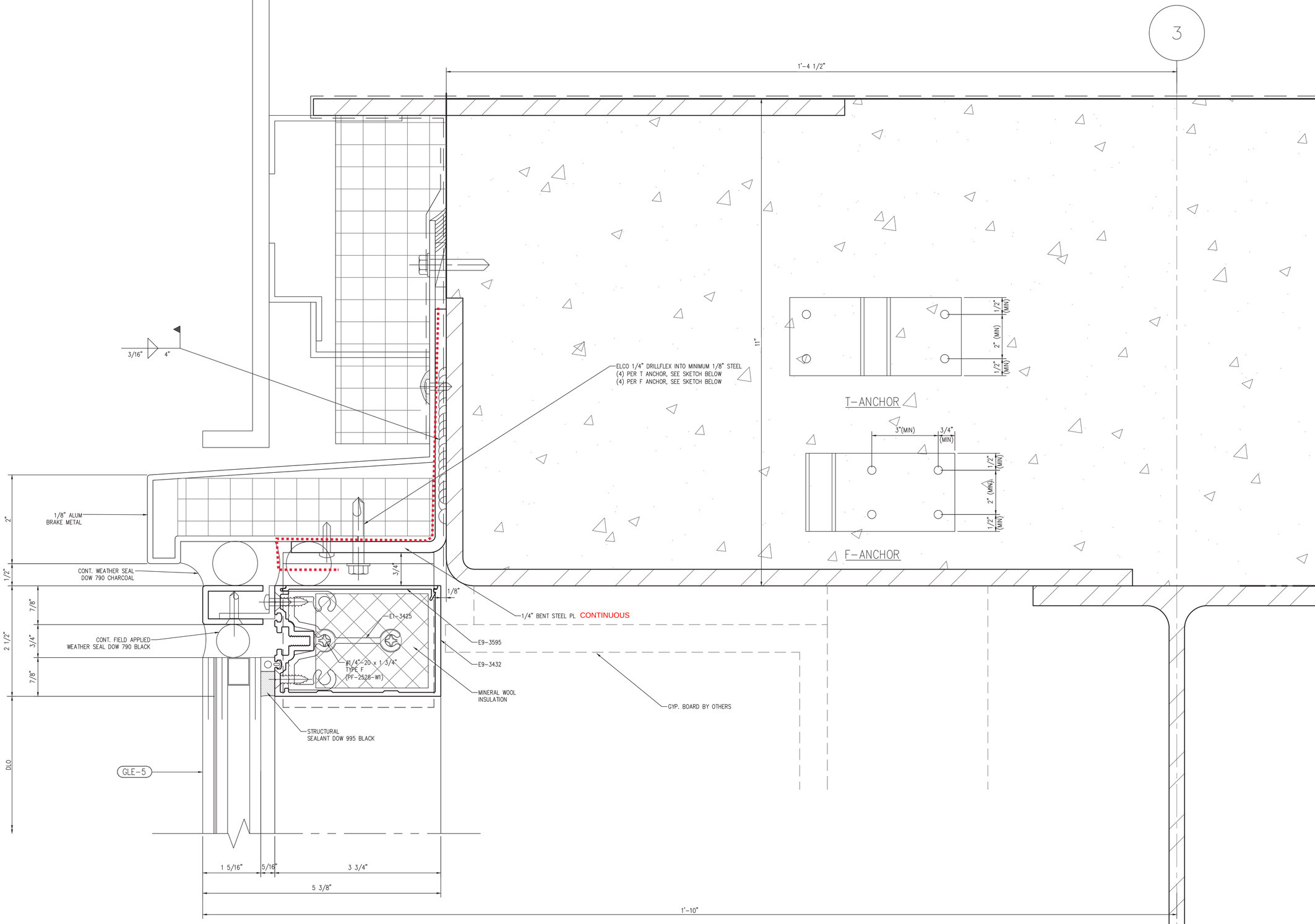

1 HEAD DETAIL

Scale: 1:1

NGG LTD

NGG LTD, INCORPORATED
1850 Craigshire Road Suite 202
St. Louis, Missouri 63146

Tel 314-336-2515
Fax 314-336-2521

Professional Seal

Sub. No.	Rev. No.	Date	Drawn By	Submitted/Revision Description
3	2	11/8/16	IY	3RD SUBMISSION
2	1	10/19/16	IY	2ND SUBMISSION
1	–	8/10/16	IY	1ST SUBMISSION

Proprietary Notice

This drawing sheet and contents herein are property of NGG. Use of this drawing, contents or design concepts for purposes other than estimating, drawing preparation and/or manufacturing for NGG shall be cause for legal recourse by NGG.

Project Name
WEBSTER UNIVERSITY
Location
St. Louis, Missouri

Architect
CANNON DESIGN
Location
St. Louis, MO

Contractor
PARIC
Location
St. Louis, Missouri

Owner
WEBSTER UNIVERSITY
Location
St. Louis, Missouri

Drawn Date	Scale
8/10/16	AS NOTED

NGG Project No.

Drawing Title
DETAILS

Drawn By	Sheet No.
IY	323

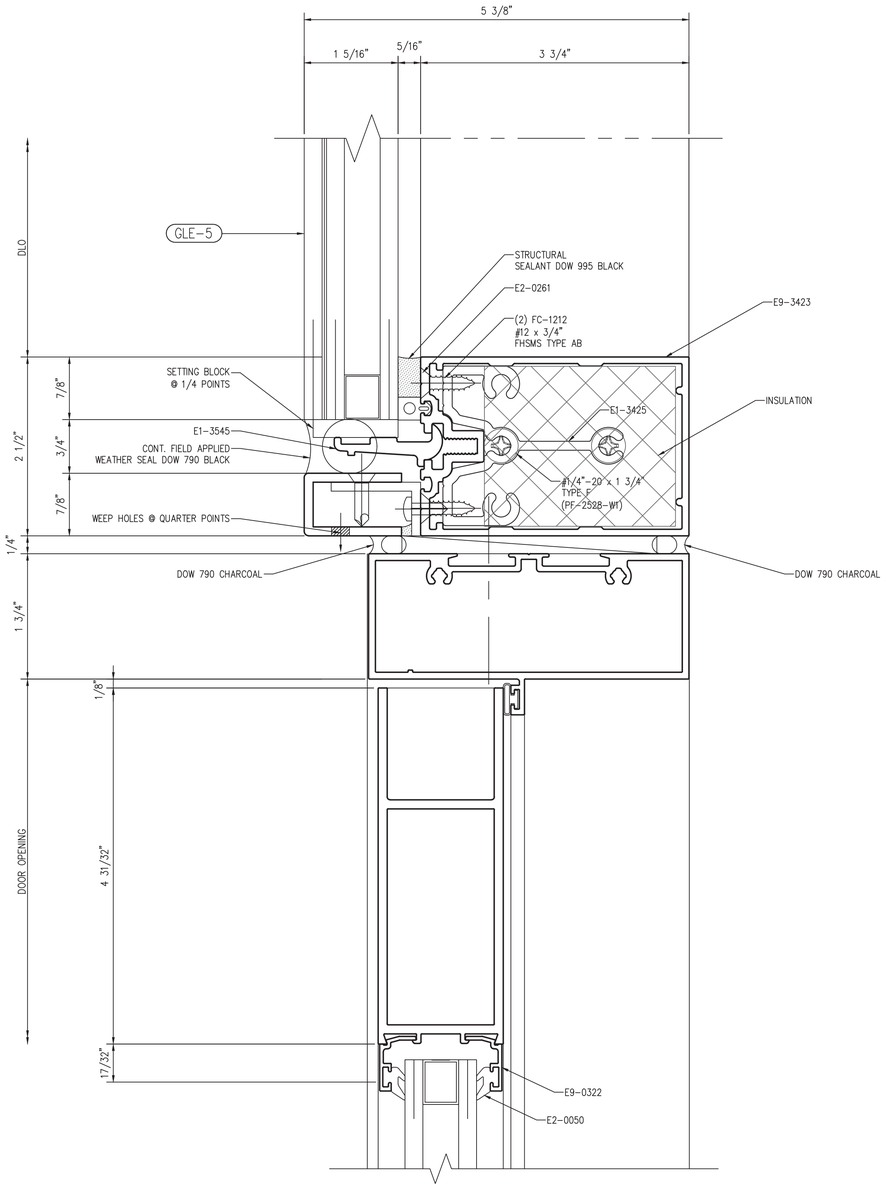

1 DOOR HEAD DETAIL
Scale: 1:1

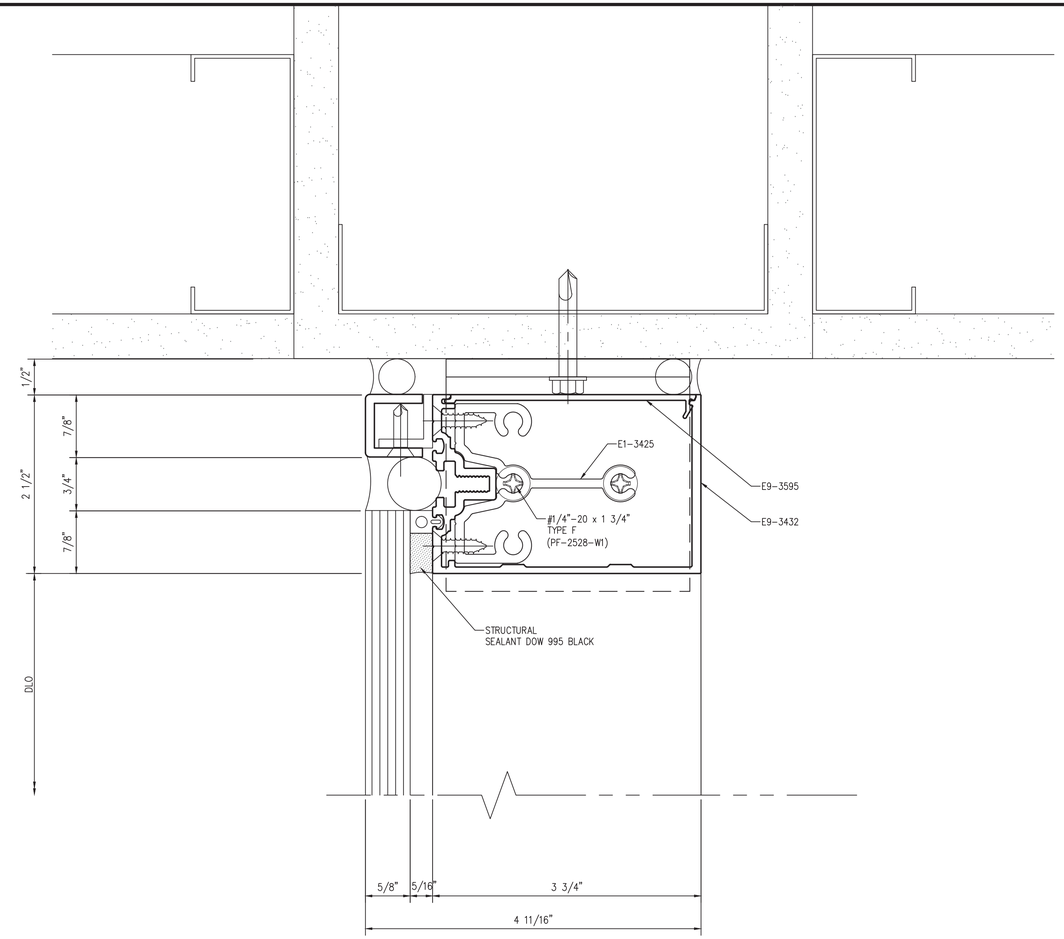

2 HEAD DETAIL
Scale: 1:1

NGG LTD

NGG LTD, INCORPORATED
1850 Craigshire Road Suite 202
St. Louis, Missouri 63146

Tel 314-336-2515
Fax 314-336-2521

Professional Seal

Sub. No.	Rev. No.	Date	Drawn By	Submitted/Revision Description
3	2	11/8/16	IY	3RD SUBMISSION
2	1	10/19/16	IY	2ND SUBMISSION
1	–	8/10/16	IY	1ST SUBMISSION

Proprietary Notice

This drawing sheet and contents herein are property of NGG. Use of this drawing, contents or design concepts for purposes other than estimating, drawing preparation and/or manufacturing for NGG shall be cause for legal recourse by NGG.

Project Name
WEBSTER UNIVERSITY
Location
St. Louis, Missouri

Architect
CANNON DESIGN
Location
St. Louis, MO

Contractor
PARIC
Location
St. Louis, Missouri

Owner
WEBSTER UNIVERSITY
Location
St. Louis, Missouri

Drawn Date	Scale
8/10/16	AS NOTED

NGG Project No.

Drawing Title
DETAILS

Drawn By	Sheet No.
IY	324

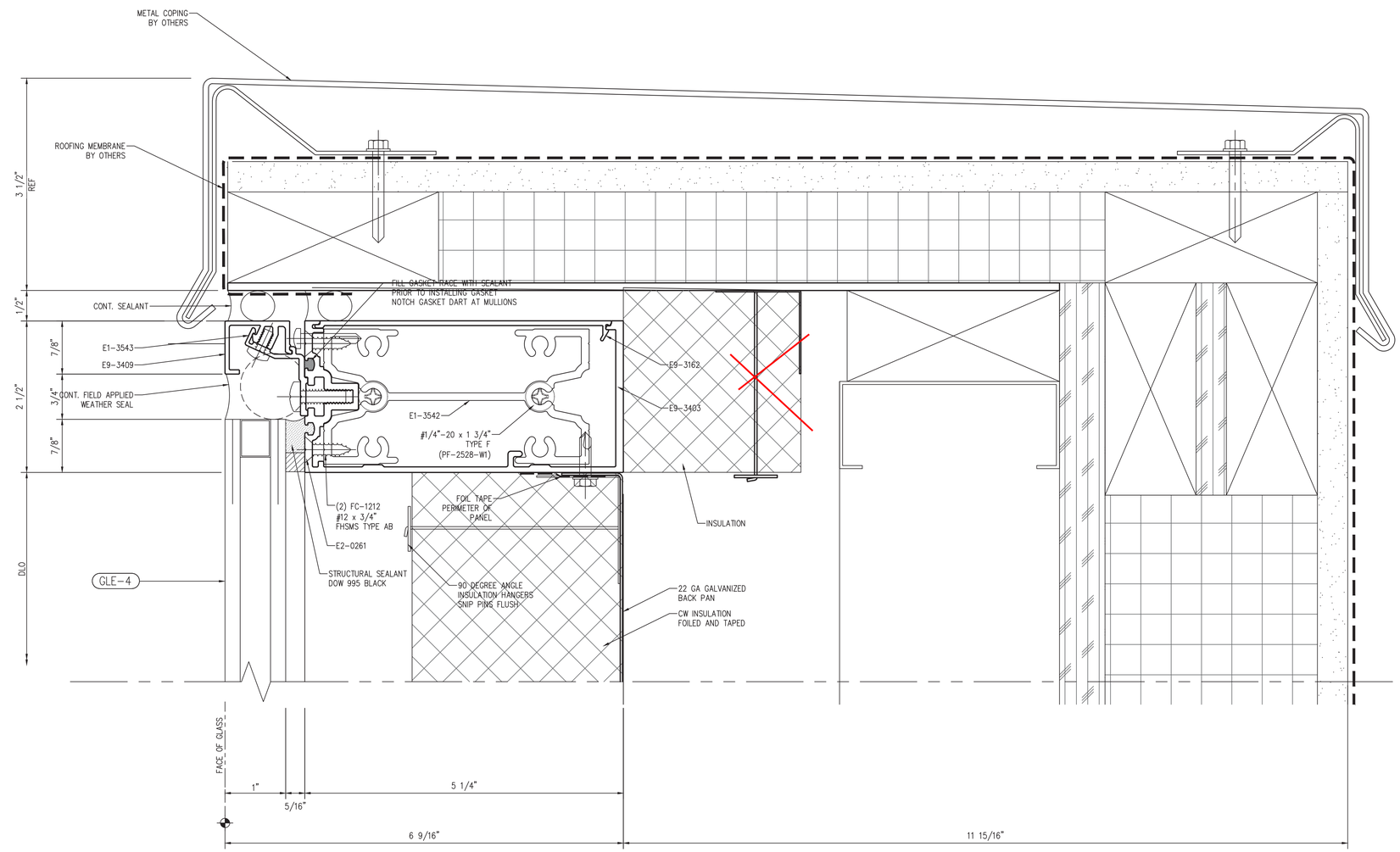

1 HEAD DETAIL

Scale: 1:1

NGG LTD

NGG LTD, INCORPORATED
1850 Craigshire Road Suite 202
St. Louis, Missouri 63146

Tel 314-336-2515
Fax 314-336-2521

Professional Seal

Sub. No.	Rev. No.	Date	Drawn By	Submitted/Revision Description
3	2	11/8/16	IY	3RD SUBMISSION
1	–	10/19/16	IY	2ND SUBMISSION

Proprietary Notice

This drawing sheet and contents herein are property of NGG. Use of this drawing, contents or design concepts for purposes other than estimating, drawing preparation and/or manufacturing for NGG shall be cause for legal recourse by NGG.

Project Name
WEBSTER UNIVERSITY
Location
St. Louis, Missouri

Architect
CANNON DESIGN
Location
St. Louis, MO

Contractor
PARIC
Location
St. Louis, Missouri

Owner
WEBSTER UNIVERSITY
Location
St. Louis, Missouri

Drawn Date	Scale
8/10/16	AS NOTED

NGG Project No.

Drawing Title
DETAILS

Drawn By	Sheet No.
IY	325

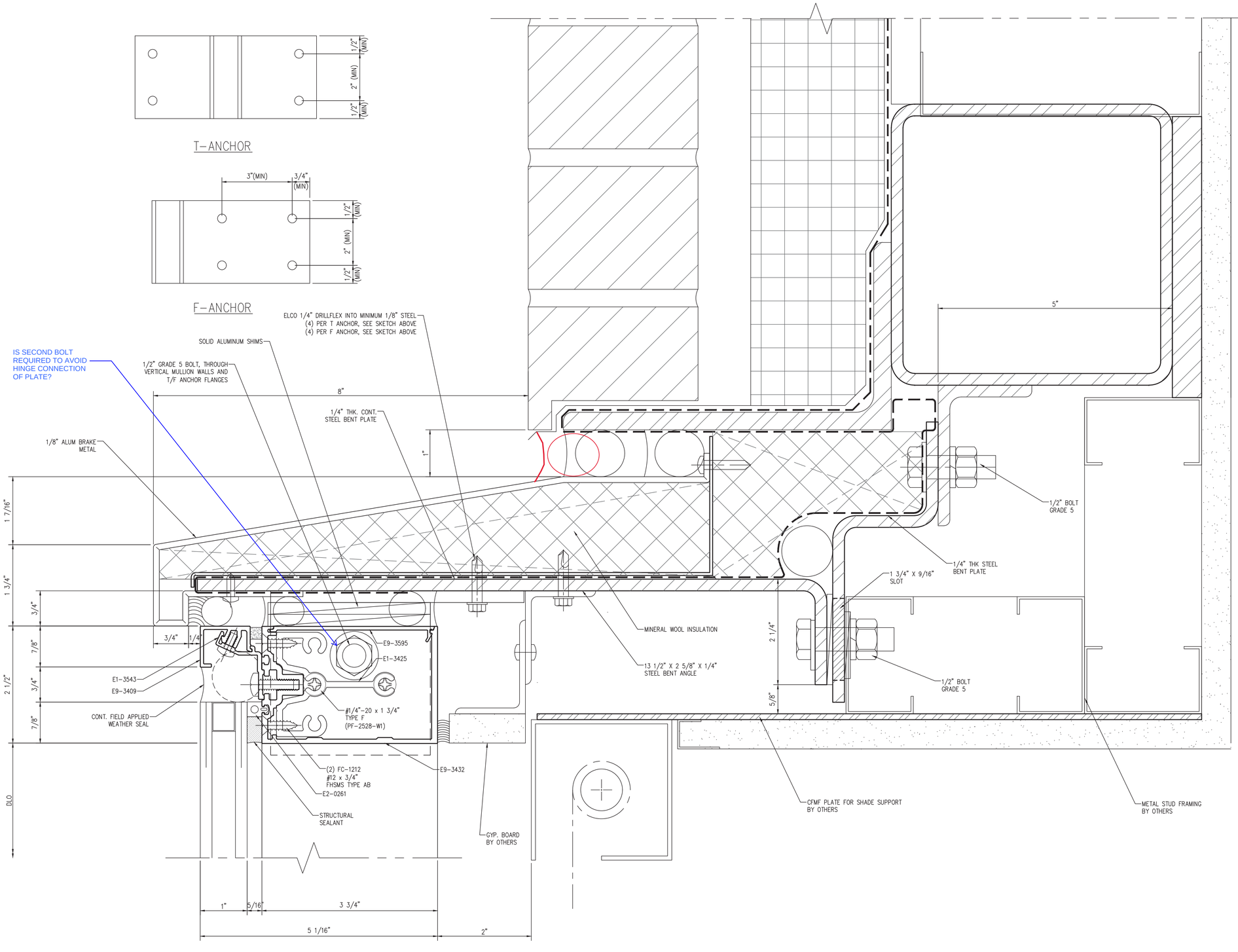

1 HEAD DETAIL

Scale: 1:1

NGG LTD

NGG LTD, INCORPORATED
1850 Craigshire Road Suite 202
St. Louis, Missouri 63146

Tel 314-336-2515
Fax 314-336-2521

Professional Seal

Sub. No.	Rev. No.	Date	Drawn By	Submitted/Revision Description
3	2	11/8/16	IY	3RD SUBMISSION
2	1	10/19/16	IY	2ND SUBMISSION
1	–	8/10/16	IY	1ST SUBMISSION

Proprietary Notice

This drawing sheet and contents herein are property of NGG. Use of this drawing, contents or design concepts for purposes other than estimating, drawing preparation and/or manufacturing for NGG shall be cause for legal recourse by NGG.

Project Name
WEBSTER UNIVERSITY
Location
St. Louis, Missouri

Architect
CANNON DESIGN
Location
St. Louis, MO

Contractor
PARIC
Location
St. Louis, Missouri

Owner
WEBSTER UNIVERSITY
Location
St. Louis, Missouri

Drawn Date	Scale
8/10/16	AS NOTED

NGG Project No.

Drawing Title
DETAILS

Drawn By	Sheet No.
IY	351

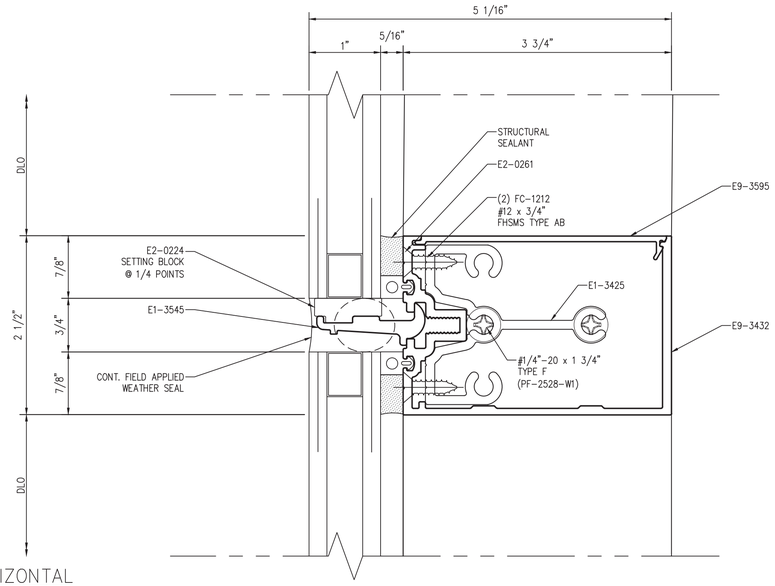

2 INTERMEDIATE HORIZONTAL

Scale: 1:1

T-ANCHOR

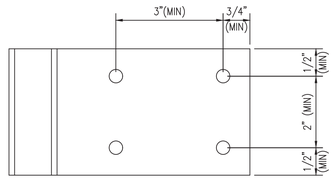

F-ANCHOR

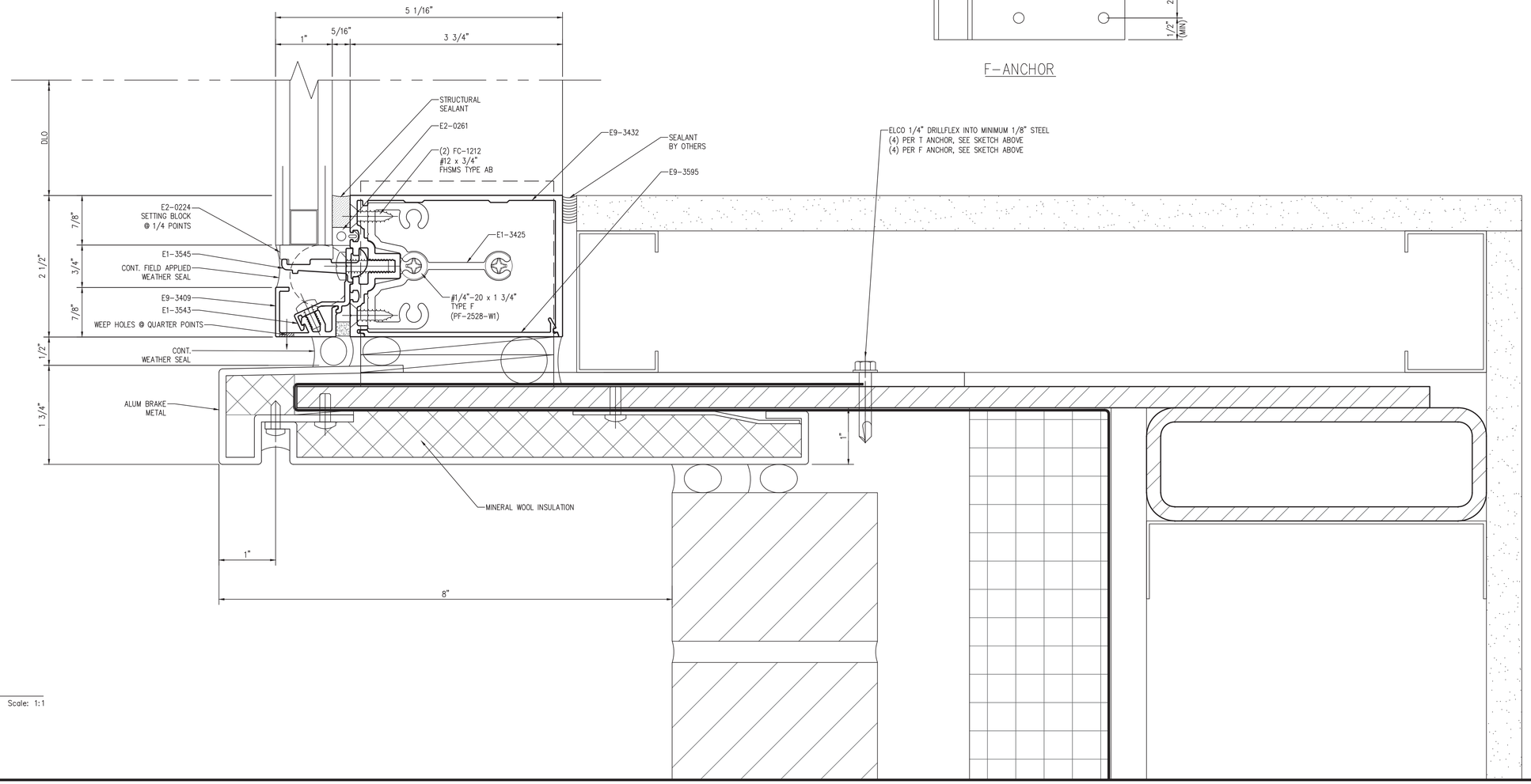

1 SILL DETAIL

Scale: 1:1

NGG LTD

NGG LTD, INCORPORATED
1850 Craigshire Road Suite 202
St. Louis, Missouri 63146

Tel 314-336-2515
Fax 314-336-2521

Professional Seal

Sub. No.	Rev. No.	Date	Drawn By	Submitted/Revision Description
3	2	11/8/16	IY	3RD SUBMISSION
2	1	10/19/16	IY	2ND SUBMISSION
1	–	8/10/16	IY	1ST SUBMISSION

Proprietary Notice

This drawing sheet and contents herein are property of NGG. Use of this drawing, contents or design concepts for purposes other than estimating, drawing preparation and/or manufacturing for NGG shall be cause for legal recourse by NGG.

Project Name
WEBSTER UNIVERSITY
Location
St. Louis, Missouri

Architect
CANNON DESIGN
Location
St. Louis, MO

Contractor
PARIC
Location
St. Louis, Missouri

Owner
WEBSTER UNIVERSITY
Location
St. Louis, Missouri

Drawn Date	Scale
8/10/16	AS NOTED

NGG Project No.

Drawing Title
DETAILS

Drawn By	Sheet No.
IY	352

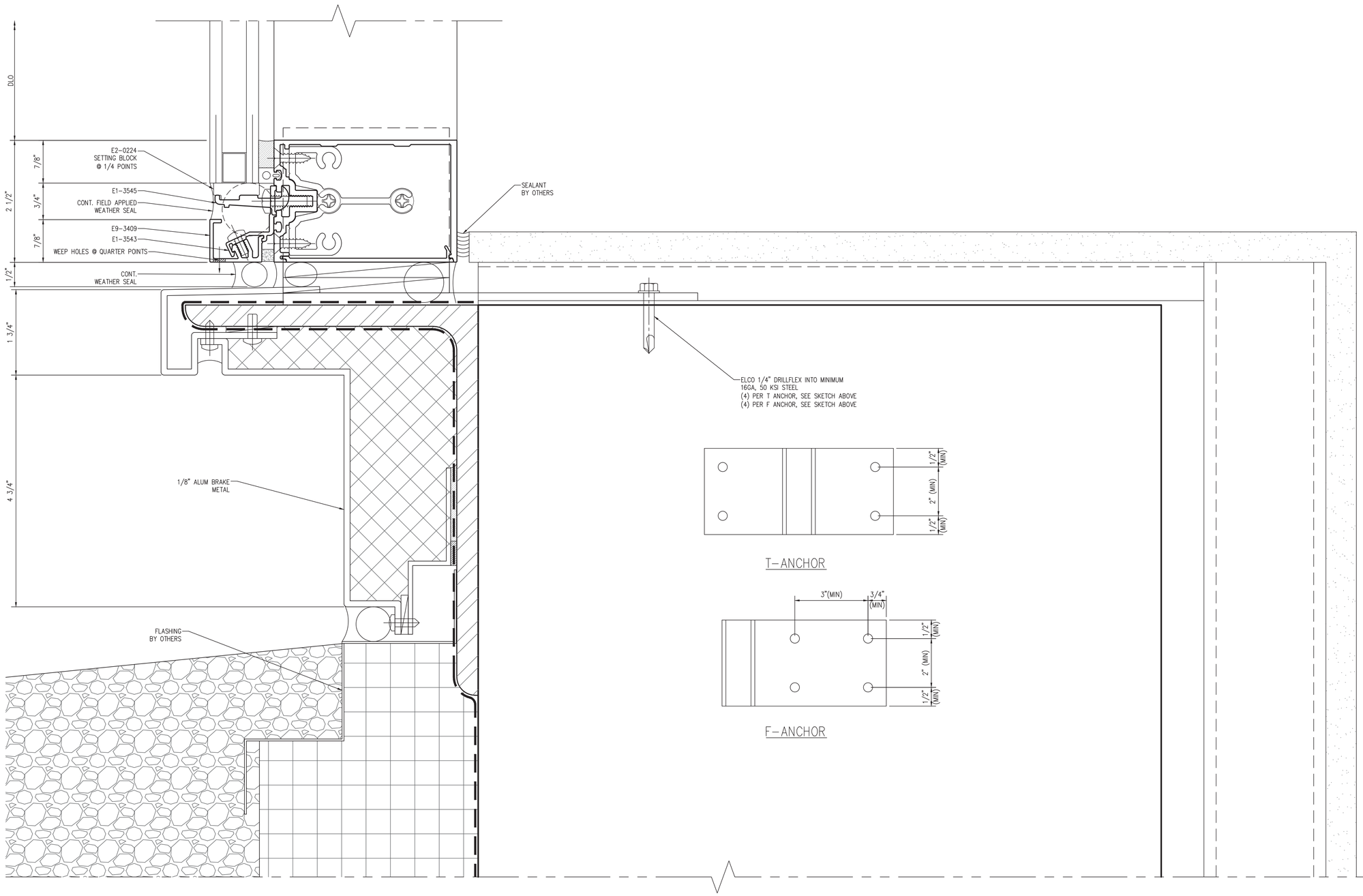

1 SILL DETAIL

Scale: 1:1

NGG LTD

NGG LTD, INCORPORATED
1850 Craigshire Road Suite 202
St. Louis, Missouri 63146

Tel 314-336-2515
Fax 314-336-2521

Professional Seal

Sub. No.	Rev. No.	Date	Drawn By	Submitted/Revision Description
3	2	11/8/16	IY	3RD SUBMISSION
2	1	10/19/16	IY	2ND SUBMISSION
1	–	8/10/16	IY	1ST SUBMISSION

Proprietary Notice

This drawing sheet and contents herein are property of NGG. Use of this drawing, contents or design concepts for purposes other than estimating, drawing preparation and/or manufacturing for NGG shall be cause for legal recourse by NGG.

Project Name
WEBSTER UNIVERSITY
Location
St. Louis, Missouri

Architect
CANNON DESIGN
Location
St. Louis, MO

Contractor
PARIC
Location
St. Louis, Missouri

Owner
WEBSTER UNIVERSITY
Location
St. Louis, Missouri

Drawn Date	Scale
8/10/16	AS NOTED

NGG Project No.

Drawing Title
DETAILS

Drawn By	Sheet No.
IY	353

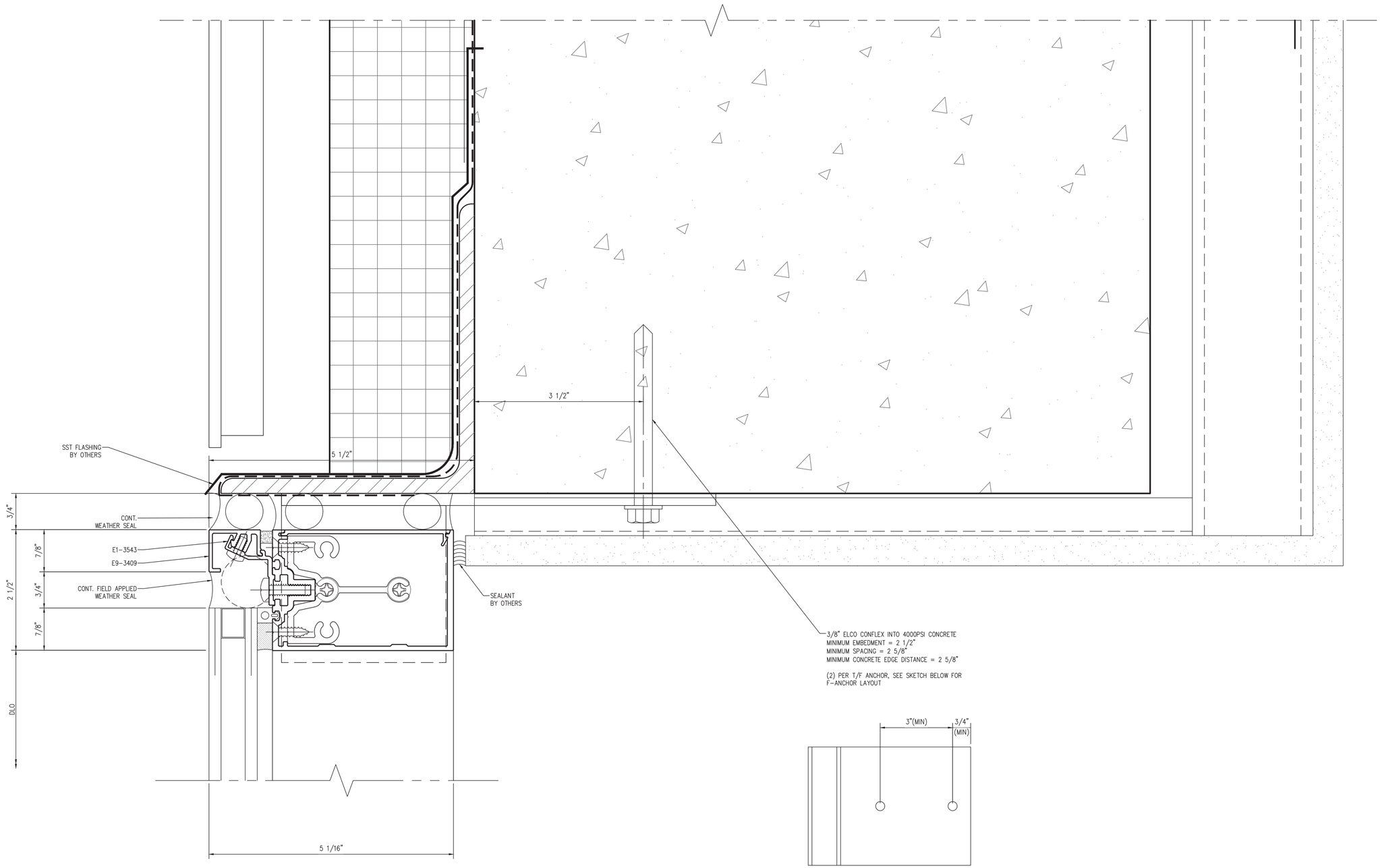

F-ANCHOR

1 HEAD DETAIL

Scale: 1:1

NGG LTD

NGG LTD, INCORPORATED
1850 Craigshire Road Suite 202
St. Louis, Missouri 63146

Tel 314-336-2515
Fax 314-336-2521

Professional Seal

Sub. No.	Rev. No.	Date	Drawn By	Submitted/Revision Description
3	2	11/8/16	IY	3RD SUBMISSION
2	1	10/19/16	IY	2ND SUBMISSION
1	–	8/10/16	IY	1ST SUBMISSION

Proprietary Notice

This drawing sheet and contents herein are property of NGG. Use of this drawing, contents or design concepts for purposes other than estimating, drawing preparation and/or manufacturing for NGG shall be cause for legal recourse by NGG.

Project Name
WEBSTER UNIVERSITY
Location
St. Louis, Missouri

Architect
CANNON DESIGN
Location
St. Louis, MO

Contractor
PARIC
Location
St. Louis, Missouri

Owner
WEBSTER UNIVERSITY
Location
St. Louis, Missouri

Drawn Date	Scale
8/10/16	AS NOTED

NGG Project No.

Drawing Title
DETAILS

Drawn By	Sheet No.
IY	354

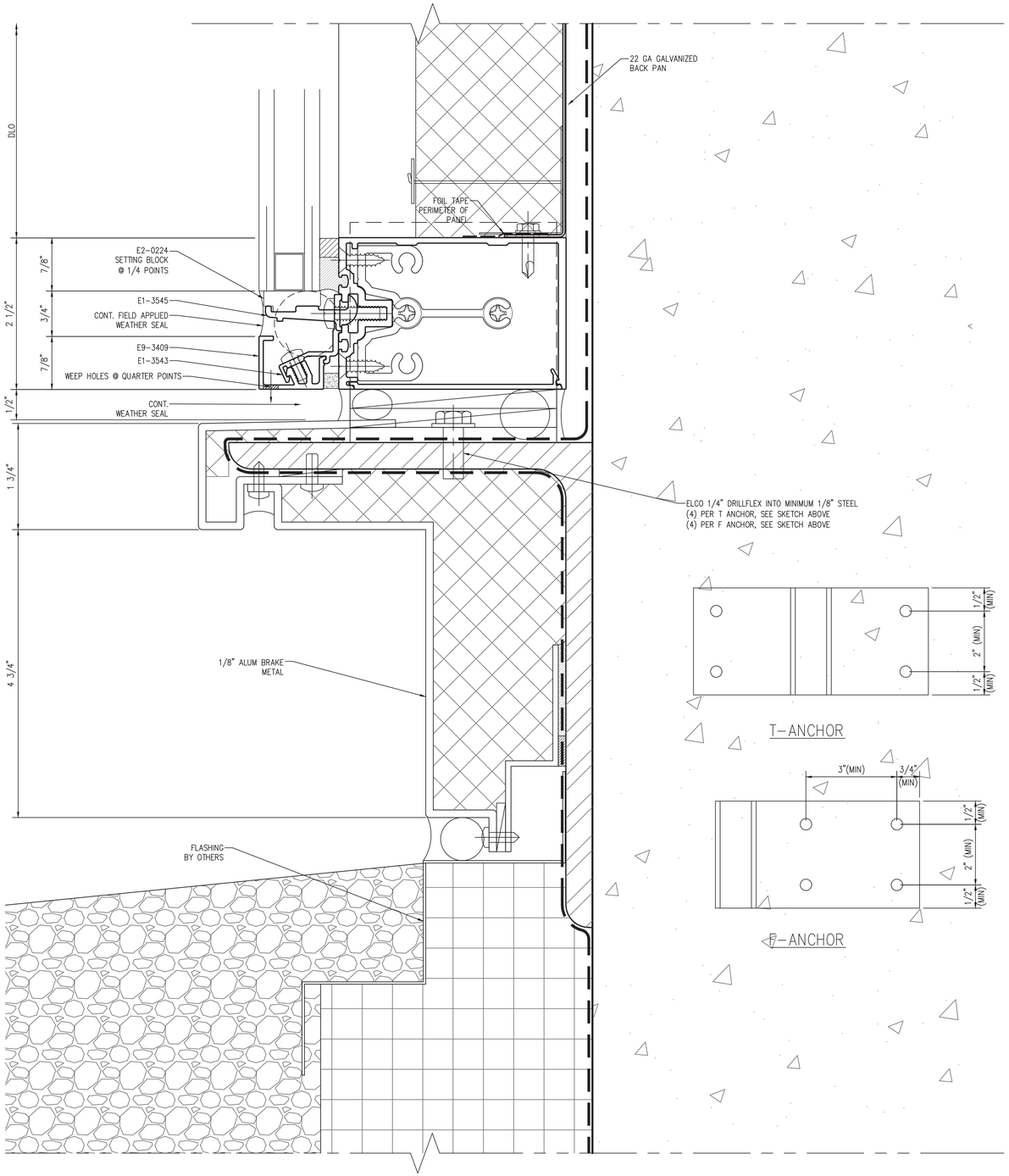

1 SILL DETAIL

Scale: 1:1

NGG LTD

NGG LTD, INCORPORATED
1850 Craigshire Road Suite 202
St. Louis, Missouri 63146

Tel 314-336-2515
Fax 314-336-2521

Professional Seal

Sub. No.	Rev. No.	Date	Drawn By	Submitted/Revision Description
3	2	11/8/16	IY	3RD SUBMISSION
2	1	10/19/16	IY	2ND SUBMISSION
1	–	8/10/16	IY	1ST SUBMISSION

Proprietary Notice

This drawing sheet and contents herein are property of NGG. Use of this drawing, contents or design concepts for purposes other than estimating, drawing preparation and/or manufacturing for NGG shall be cause for legal recourse by NGG.

Project Name
WEBSTER UNIVERSITY
Location
St. Louis, Missouri

Architect
CANNON DESIGN
Location
St. Louis, MO

Contractor
PARIC
Location
St. Louis, Missouri

Owner
WEBSTER UNIVERSITY
Location
St. Louis, Missouri

Drawn Date	Scale
8/10/16	AS NOTED

NGG Project No.

Drawing Title
DETAILS

Drawn By	Sheet No.
IY	355

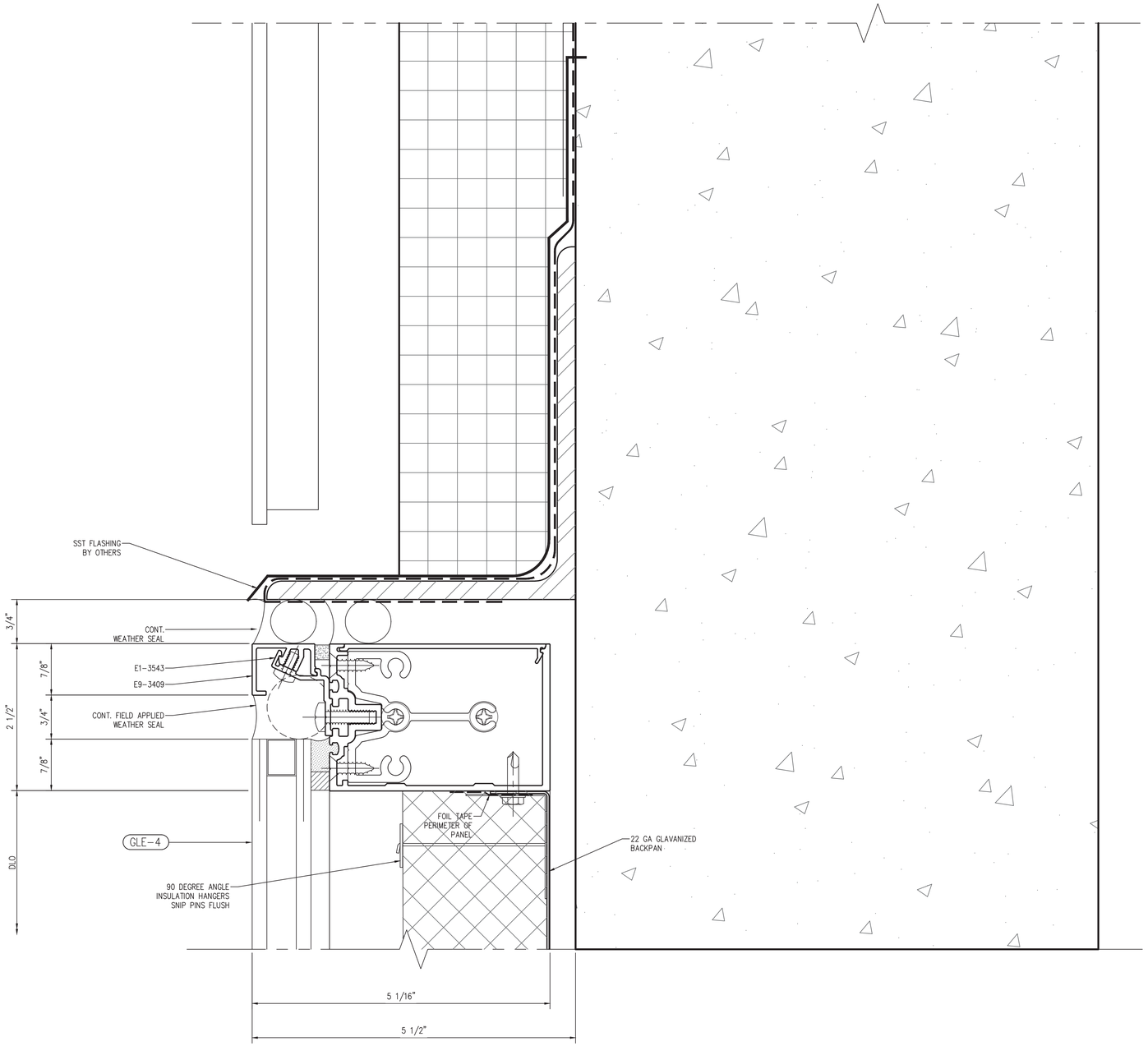

1 HEAD DETAIL

Scale: 1:1

NGG LTD

NGG LTD, INCORPORATED
1850 Craigshire Road Suite 202
St. Louis, Missouri 63146

Tel 314-336-2515
Fax 314-336-2521

Professional Seal

Sub. No.	Rev. No.	Date	Drawn By	Submitted/Revision Description
3	2	11/8/16	IY	3RD SUBMISSION
2	1	10/19/16	IY	2ND SUBMISSION
1	–	8/10/16	IY	1ST SUBMISSION

Proprietary Notice

This drawing sheet and contents herein are property of NGG. Use of this drawing, contents or design concepts for purposes other than estimating, drawing preparation and/or manufacturing for NGG shall be cause for legal recourse by NGG.

Project Name
WEBSTER UNIVERSITY
Location
St. Louis, Missouri

Architect
CANNON DESIGN
Location
St. Louis, MO

Contractor
PARIC
Location
St. Louis, Missouri

Owner
WEBSTER UNIVERSITY
Location
St. Louis, Missouri

Drawn Date	Scale
8/10/16	AS NOTED

NGG Project No.

Drawing Title
DETAILS

Drawn By	Sheet No.
IY	356

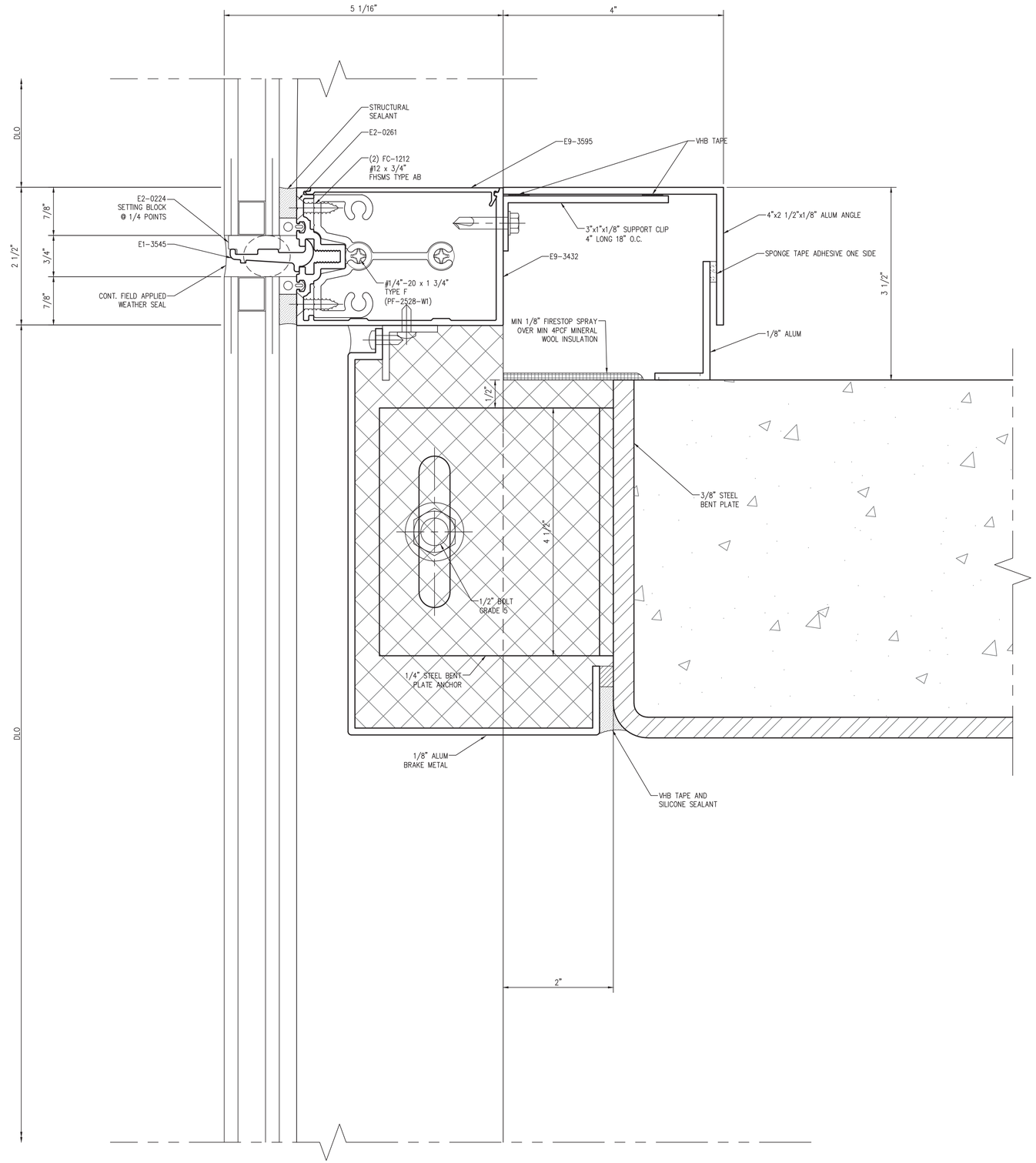

1 WIND LOAD ANCHOR
Scale: 1:1

NGG LTD

NGG LTD, INCORPORATED
1850 Craigshire Road Suite 202
St. Louis, Missouri 63146

Tel 314-336-2515
Fax 314-336-2521

Professional Seal

Sub. No.	Rev. No.	Date	Drawn By	Submitted/Revision Description
3	2	11/8/16	IY	3RD SUBMISSION
2	1	10/19/16	IY	2ND SUBMISSION
1	–	8/10/16	IY	1ST SUBMISSION

Proprietary Notice

This drawing sheet and contents herein are property of NGG. Use of this drawing, contents or design concepts for purposes other than estimating, drawing preparation and/or manufacturing for NGG shall be cause for legal recourse by NGG.

Project Name
WEBSTER UNIVERSITY
Location
St. Louis, Missouri

Architect
CANNON DESIGN
Location
St. Louis, MO

Contractor
PARIC
Location
St. Louis, Missouri

Owner
WEBSTER UNIVERSITY
Location
St. Louis, Missouri

Drawn Date	Scale
8/10/16	AS NOTED

NGG Project No.

Drawing Title
DETAILS

Drawn By	Sheet No.
IY	357

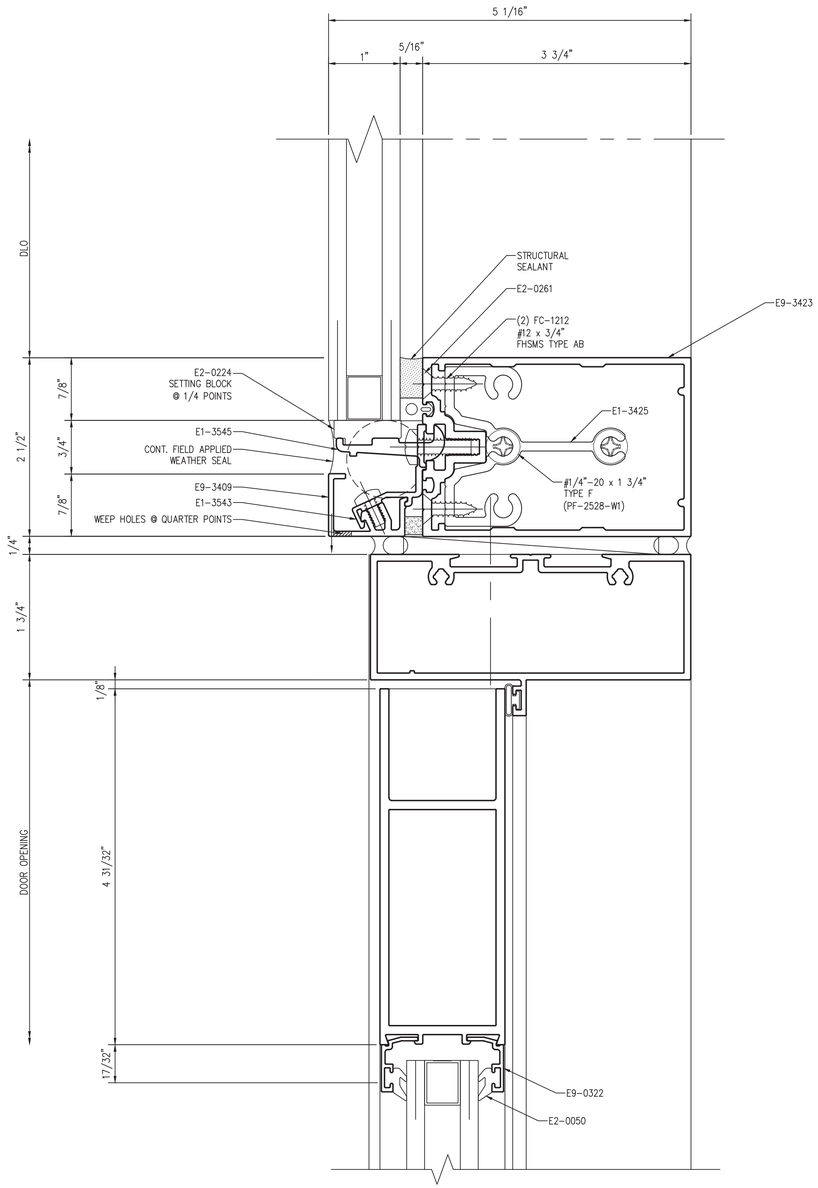

1 DOOR HEAD DETAIL

Scale: 1:1

NGG LTD

NGG LTD, INCORPORATED
1850 Craigshire Road Suite 202
St. Louis, Missouri 63146

Tel 314-336-2515
Fax 314-336-2521

Professional Seal

Sub. No.	Rev. No.	Date	Drawn By	Submitted/Revision Description
3	2	11/8/16	IY	3RD SUBMISSION
1	–	10/19/16	IY	2ND SUBMISSION

Proprietary Notice

This drawing sheet and contents herein are property of NGG. Use of this drawing, contents or design concepts for purposes other than estimating, drawing preparation and/or manufacturing for NGG shall be cause for legal recourse by NGG.

Project Name
WEBSTER UNIVERSITY
Location
St. Louis, Missouri

Architect
CANNON DESIGN
Location
St. Louis, MO

Contractor
PARIC
Location
St. Louis, Missouri

Owner
WEBSTER UNIVERSITY
Location
St. Louis, Missouri

Drawn Date	Scale
8/10/16	AS NOTED

NGG Project No.

Drawing Title
DETAILS

Drawn By	Sheet No.
IY	359

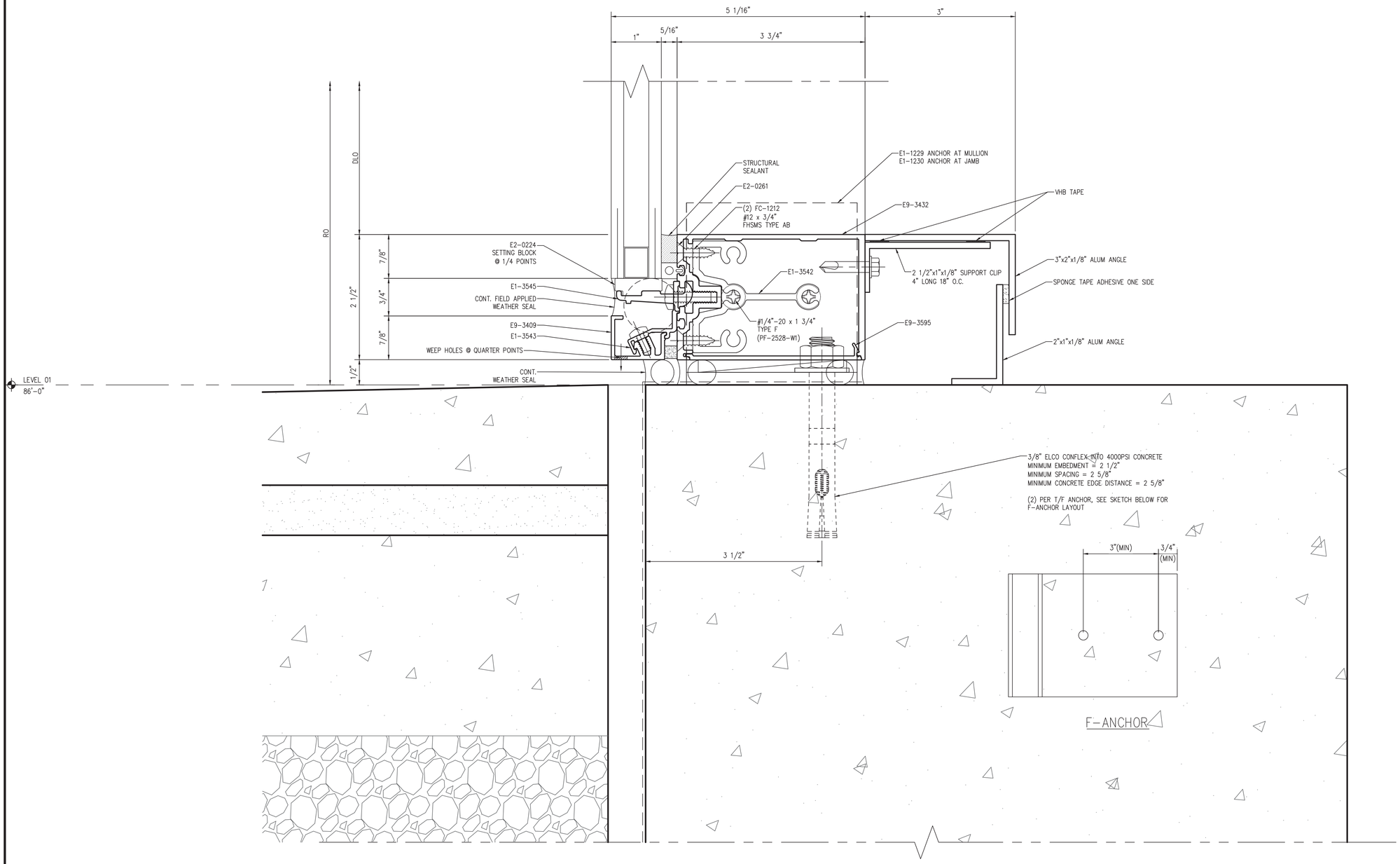

1 SILL DETAIL

Scale: 1:1

NGG LTD

NGG LTD, INCORPORATED
1850 Craigshire Road Suite 202
St. Louis, Missouri 63146

Tel 314-336-2515
Fax 314-336-2521

Professional Seal

Sub. No.	Rev. No.	Date	Drawn By	Submitted/Revision Description
3	2	11/8/16	IY	3RD SUBMISSION
1	–	10/19/16	IY	2ND SUBMISSION

Proprietary Notice

This drawing sheet and contents herein are property of NGG. Use of this drawing, contents or design concepts for purposes other than estimating, drawing preparation and/or manufacturing for NGG shall be cause for legal recourse by NGG.

Project Name
WEBSTER UNIVERSITY
Location
St. Louis, Missouri

Architect
CANNON DESIGN
Location
St. Louis, MO

Contractor
PARIC
Location
St. Louis, Missouri

Owner
WEBSTER UNIVERSITY
Location
St. Louis, Missouri

Drawn Date	Scale
8/10/16	AS NOTED

NGG Project No.

Drawing Title
DETAILS

Drawn By	Sheet No.
IY	360

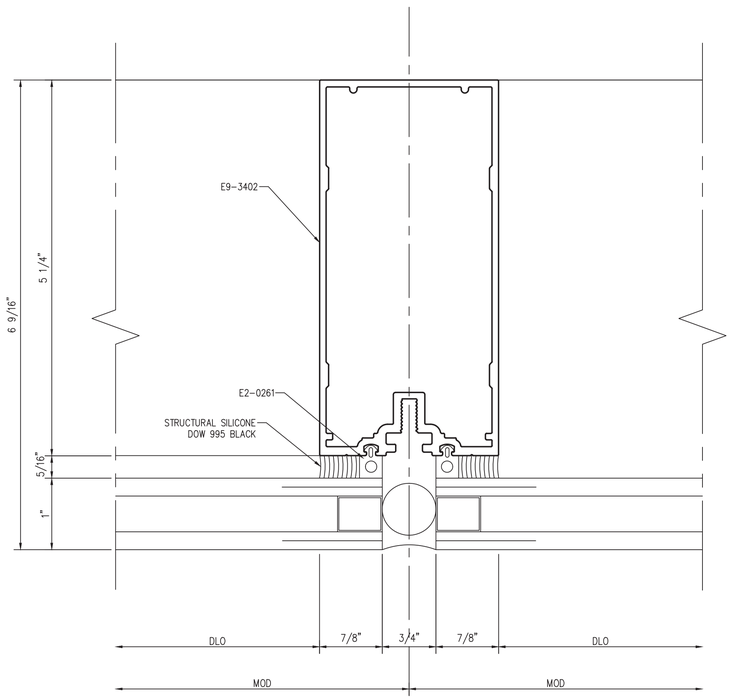

1 SSG MULLION

Scale: 1:1

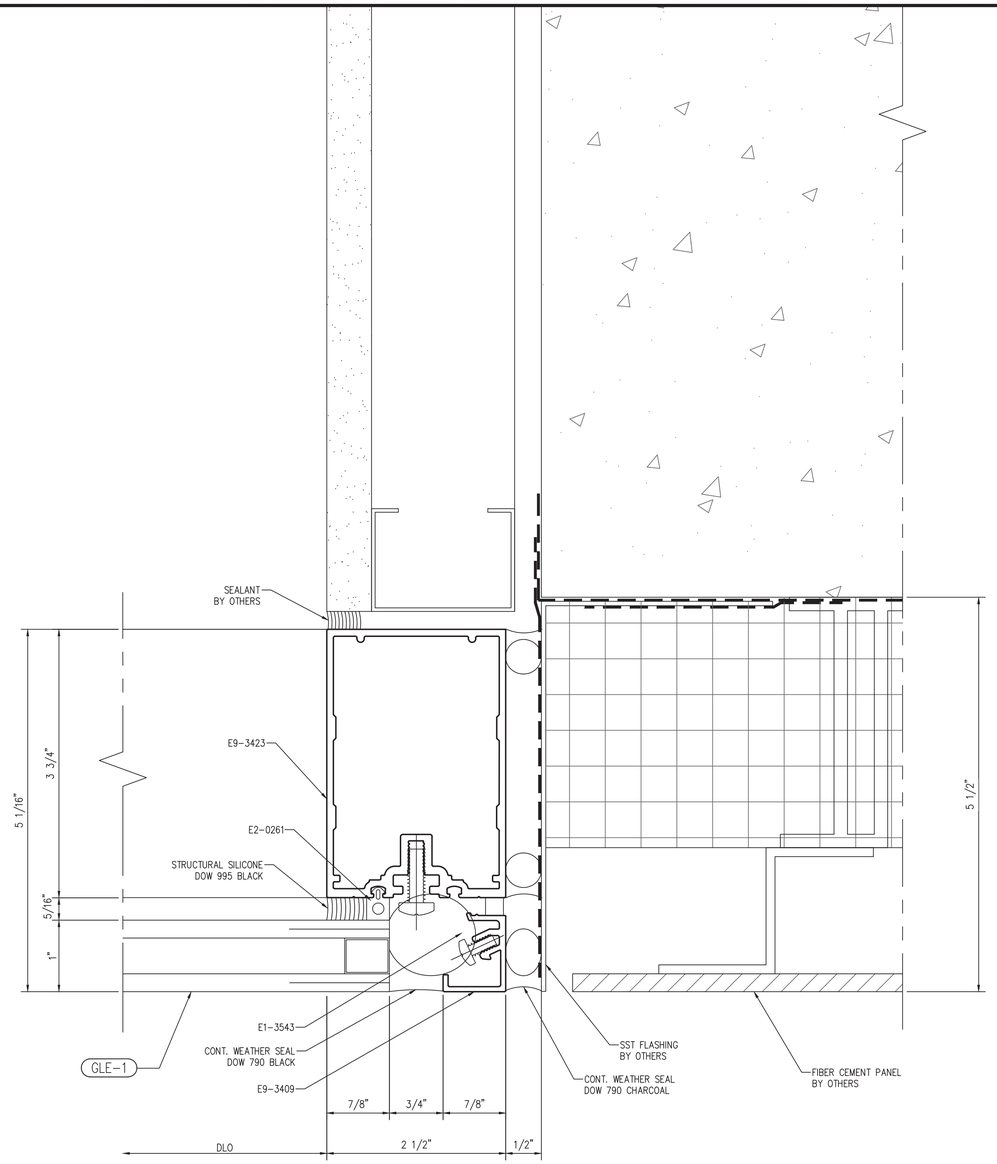

2 JAMB MULLION

REF. 2/A0422

Scale: 1:1

NGG LTD

NGG LTD, INCORPORATED
1850 Craigshire Road Suite 202
St. Louis, Missouri 63146

Tel 314-336-2515
Fax 314-336-2521

Professional Seal

Sub. No.	Rev. No.	Date	Drawn By	Submitted/Revision Description
3	2	11/8/16	IY	3RD SUBMISSION
2	1	10/19/16	IY	2ND SUBMISSION
1	–	8/10/16	IY	1ST SUBMISSION

Proprietary Notice

This drawing sheet and contents herein are property of NGG. Use of this drawing, contents or design concepts for purposes other than estimating, drawing preparation and/or manufacturing for NGG shall be cause for legal recourse by NGG.

Project Name
WEBSTER UNIVERSITY
Location
St. Louis, Missouri

Architect
CANNON DESIGN
Location
St. Louis, MO

Contractor
PARIC
Location
St. Louis, Missouri

Owner
WEBSTER UNIVERSITY
Location
St. Louis, Missouri

Drawn Date	Scale
8/10/16	AS NOTED

NGG Project No.

Drawing Title
DETAILS

Drawn By	Sheet No.
IY	400

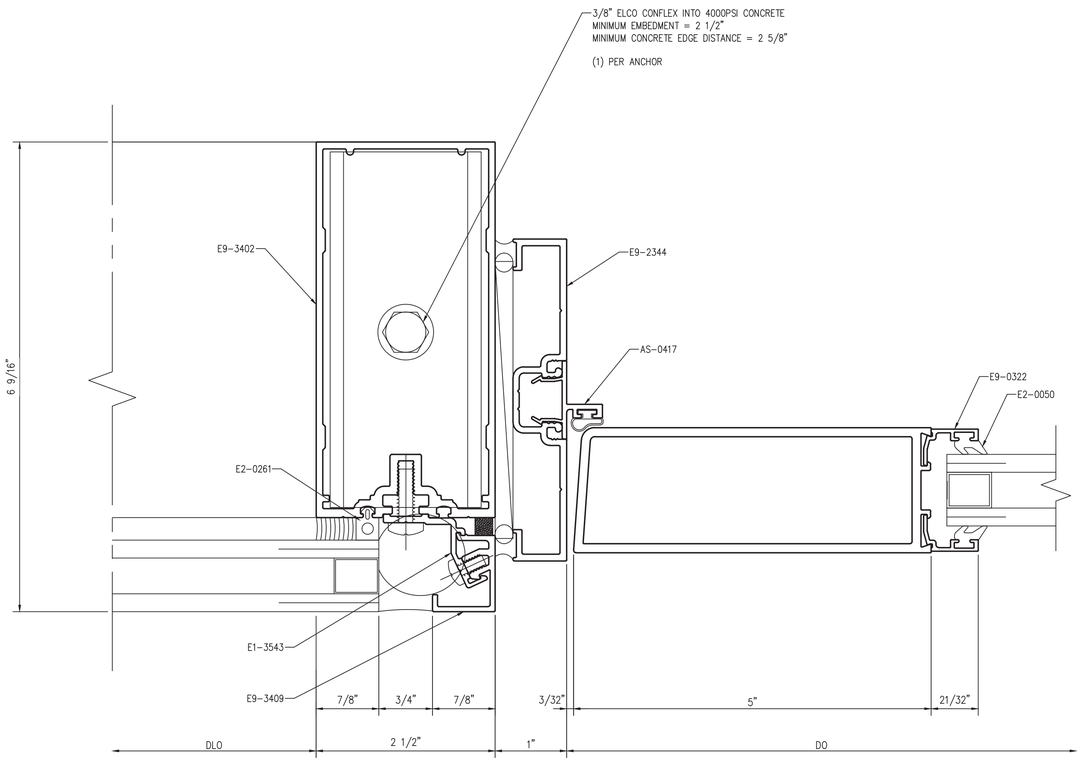

1 DOOR JAMB
Scale: 1:1

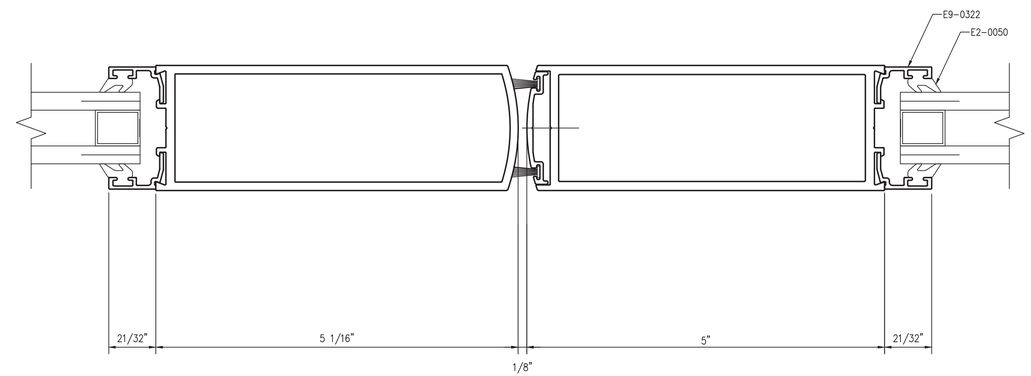

2 DOOR MEETING STILES
Scale: 1:1

NGG LTD

NGG LTD, INCORPORATED
1850 Craigshire Road Suite 202
St. Louis, Missouri 63146

Tel 314-336-2515
Fax 314-336-2521

Professional Seal

Sub. No.	Rev. No.	Date	Drawn By	Submitted/Revision Description
3	2	11/8/16	IY	3RD SUBMISSION
2	1	10/19/16	IY	2ND SUBMISSION
1	–	8/10/16	IY	1ST SUBMISSION

Proprietary Notice

This drawing sheet and contents herein are property of NGG. Use of this drawing, contents or design concepts for purposes other than estimating, drawing preparation and/or manufacturing for NGG shall be cause for legal recourse by NGG.

Project Name
WEBSTER UNIVERSITY
Location
St. Louis, Missouri

Architect
CANNON DESIGN
Location
St. Louis, MO

Contractor
PARIC
Location
St. Louis, Missouri

Owner
WEBSTER UNIVERSITY
Location
St. Louis, Missouri

Drawn Date	Scale
8/10/16	AS NOTED

NGG Project No.

Drawing Title
DETAILS

Drawn By	Sheet No.
IY	401

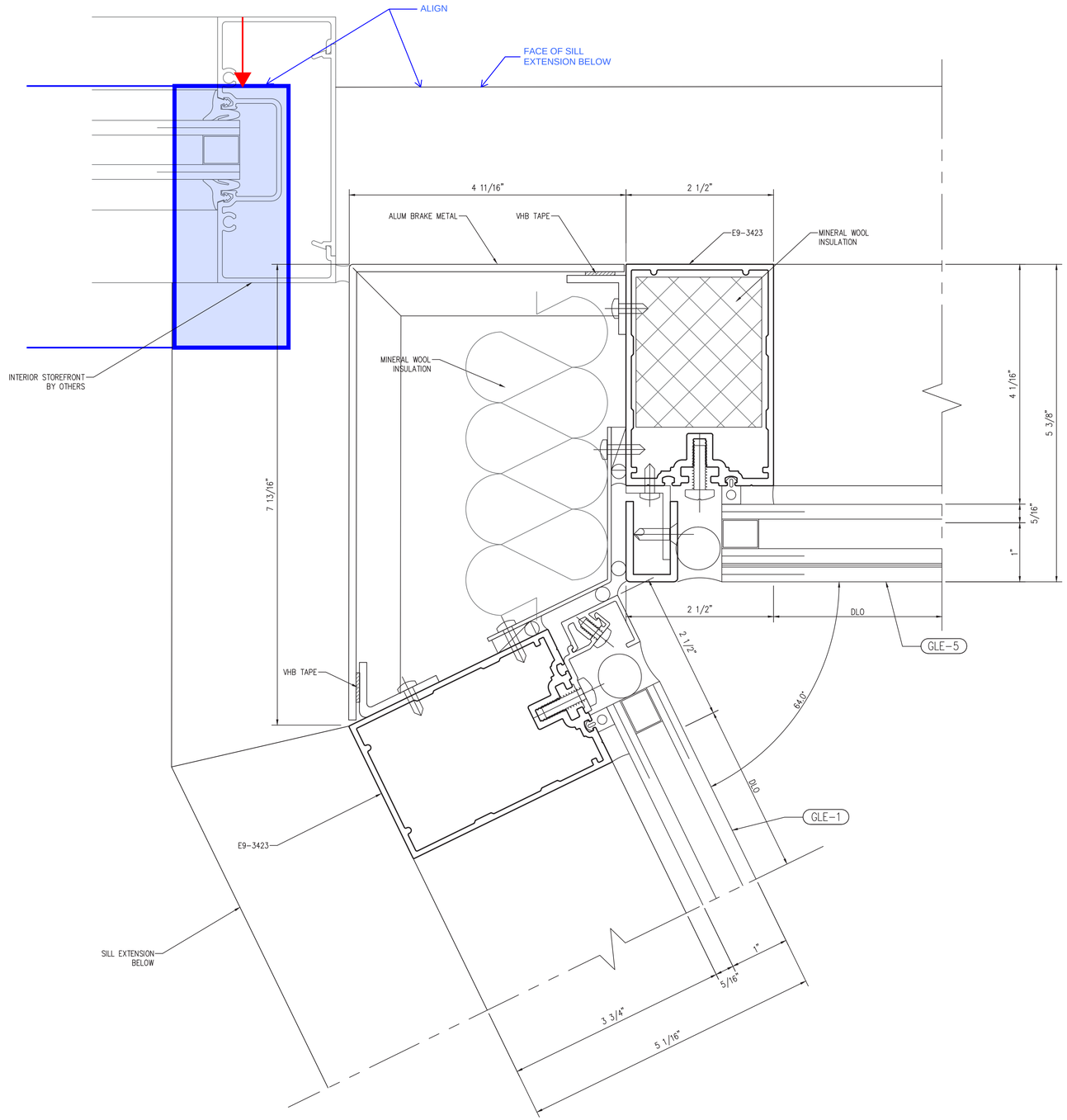

1 CORNER DETAIL

Scale: 1:1

NGG LTD

NGG LTD, INCORPORATED
1850 Craigshire Road Suite 202
St. Louis, Missouri 63146

Tel 314-336-2515
Fax 314-336-2521

Professional Seal

Sub. No.	Rev. No.	Date	Drawn By	Submitted/Revision Description
3	2	11/8/16	IY	3RD SUBMISSION
2	1	10/19/16	IY	2ND SUBMISSION
1	–	8/10/16	IY	1ST SUBMISSION

Proprietary Notice

This drawing sheet and contents herein are property of NGG. Use of this drawing, contents or design concepts for purposes other than estimating, drawing preparation and/or manufacturing for NGG shall be cause for legal recourse by NGG.

Project Name
WEBSTER UNIVERSITY
Location
St. Louis, Missouri

Architect
CANNON DESIGN
Location
St. Louis, MO

Contractor
PARIC
Location
St. Louis, Missouri

Owner
WEBSTER UNIVERSITY
Location
St. Louis, Missouri

Drawn Date	Scale
8/10/16	AS NOTED

NGG Project No.

Drawing Title
DETAILS

Drawn By	Sheet No.
IY	402

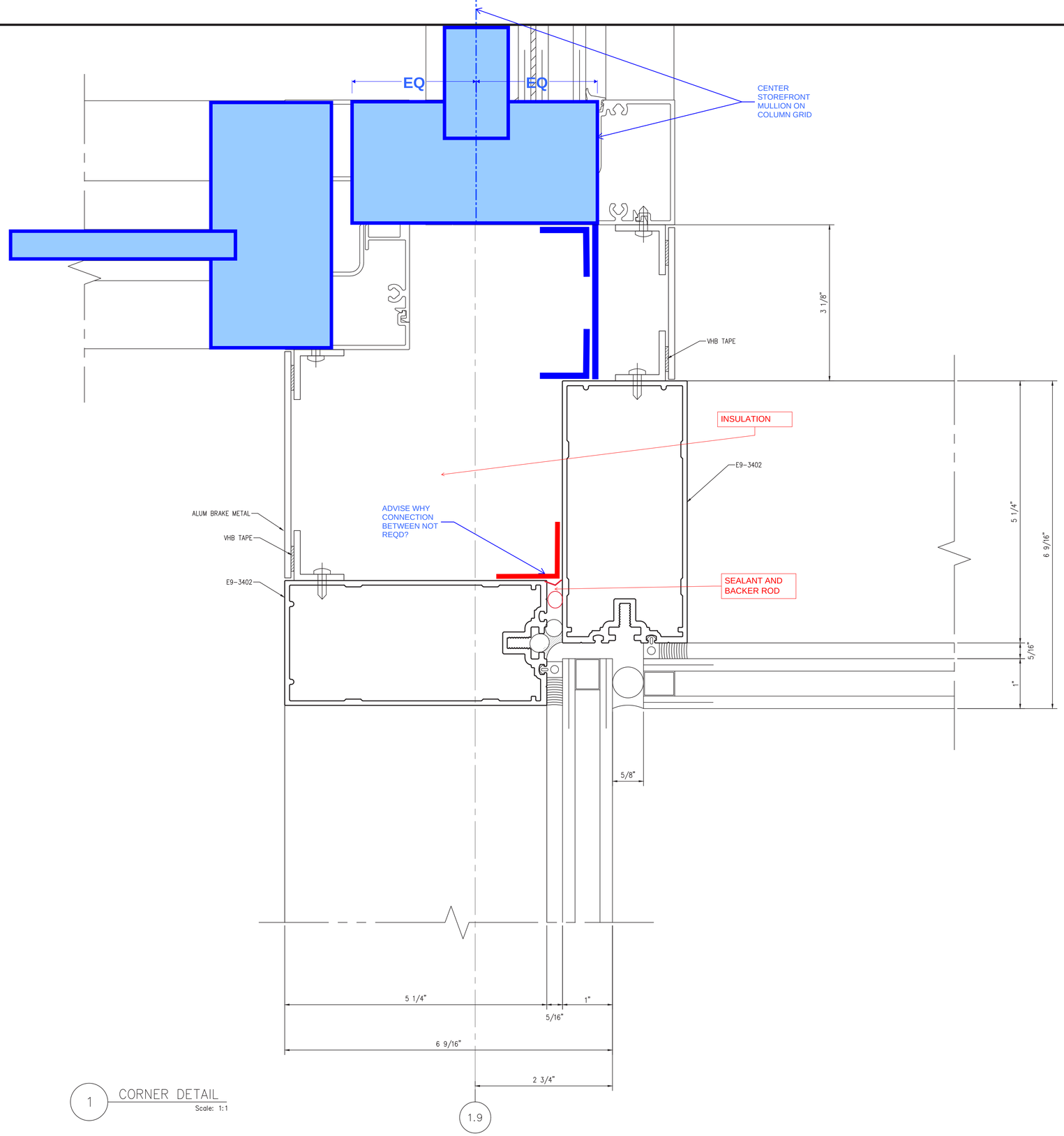

1 CORNER DETAIL
Scale: 1:1

NGG LTD

NGG LTD, INCORPORATED
1850 Craigshire Road Suite 202
St. Louis, Missouri 63146

Tel 314-336-2515
Fax 314-336-2521

Professional Seal

Sub. No.	Rev. No.	Date	Drawn By	Submitted/Revision Description
3	2	11/8/16	IY	3RD SUBMISSION
2	1	10/19/16	IY	2ND SUBMISSION
1	–	8/10/16	IY	1ST SUBMISSION

Proprietary Notice

This drawing sheet and contents herein are property of NGG. Use of this drawing, contents or design concepts for purposes other than estimating, drawing preparation and/or manufacturing for NGG shall be cause for legal recourse by NGG.

Project Name
WEBSTER UNIVERSITY
Location
St. Louis, Missouri

Architect
CANNON DESIGN
Location
St. Louis, MO

Contractor
PARIC
Location
St. Louis, Missouri

Owner
WEBSTER UNIVERSITY
Location
St. Louis, Missouri

Drawn Date	Scale
8/10/16	AS NOTED

NGG Project No.

Drawing Title
DETAILS

Drawn By	Sheet No.
IY	403

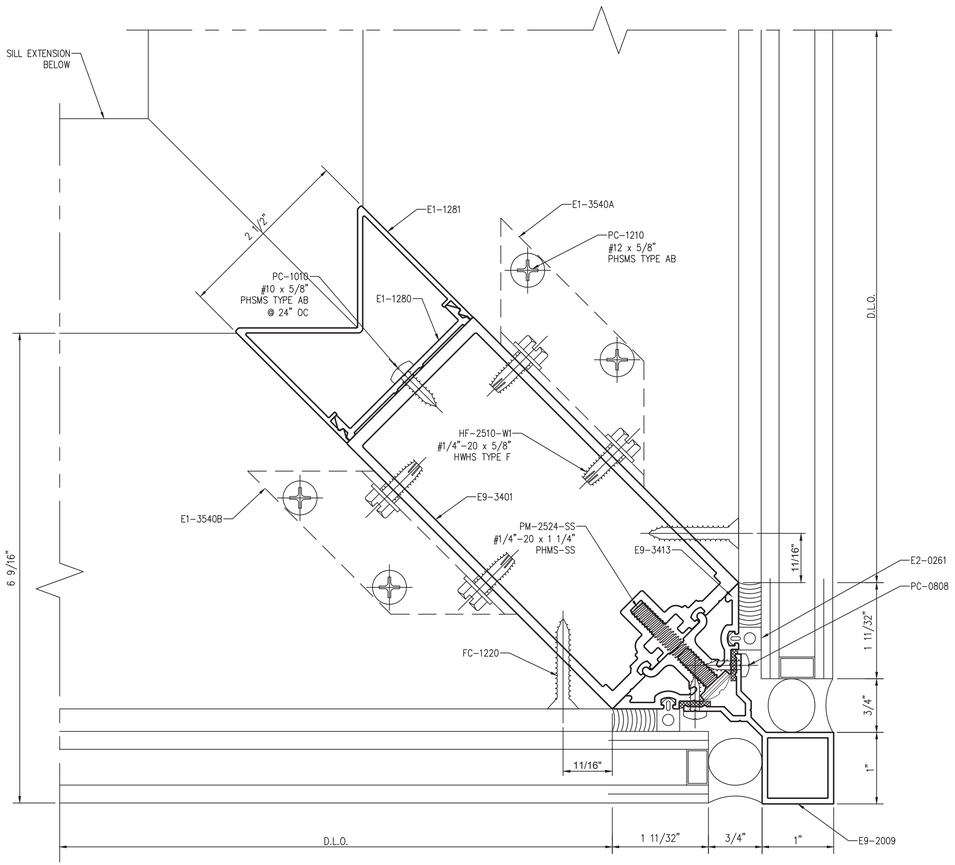

1 CORNER DETAIL
Scale: 1:1

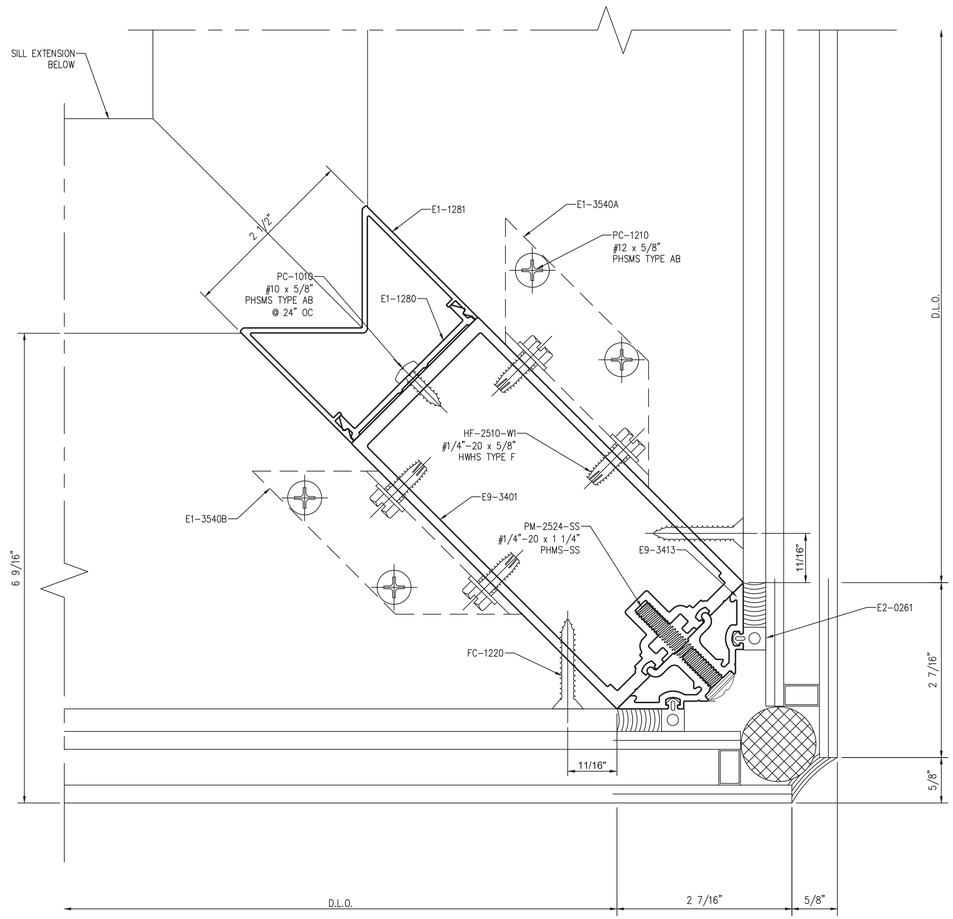

2 CORNER DETAIL
Scale: 1:1

NGG LTD

NGG LTD, INCORPORATED
1850 Craigshire Road Suite 202
St. Louis, Missouri 63146

Tel 314-336-2515
Fax 314-336-2521

Professional Seal

Sub. No.	Rev. No.	Date	Drawn By	Submitted/Revision Description
3	2	11/8/16	IY	3RD SUBMISSION
2	1	10/19/16	IY	2ND SUBMISSION
1	–	8/10/16	IY	1ST SUBMISSION

Proprietary Notice

This drawing sheet and contents herein are property of NGG. Use of this drawing, contents or design concepts for purposes other than estimating, drawing preparation and/or manufacturing for NGG shall be cause for legal recourse by NGG.

Project Name
WEBSTER UNIVERSITY
Location
St. Louis, Missouri

Architect
CANNON DESIGN
Location
St. Louis, MO

Contractor
PARIC
Location
St. Louis, Missouri

Owner
WEBSTER UNIVERSITY
Location
St. Louis, Missouri

Drawn Date	Scale
8/10/16	AS NOTED

NGG Project No.

Drawing Title
DETAILS

Drawn By	Sheet No.
IY	404

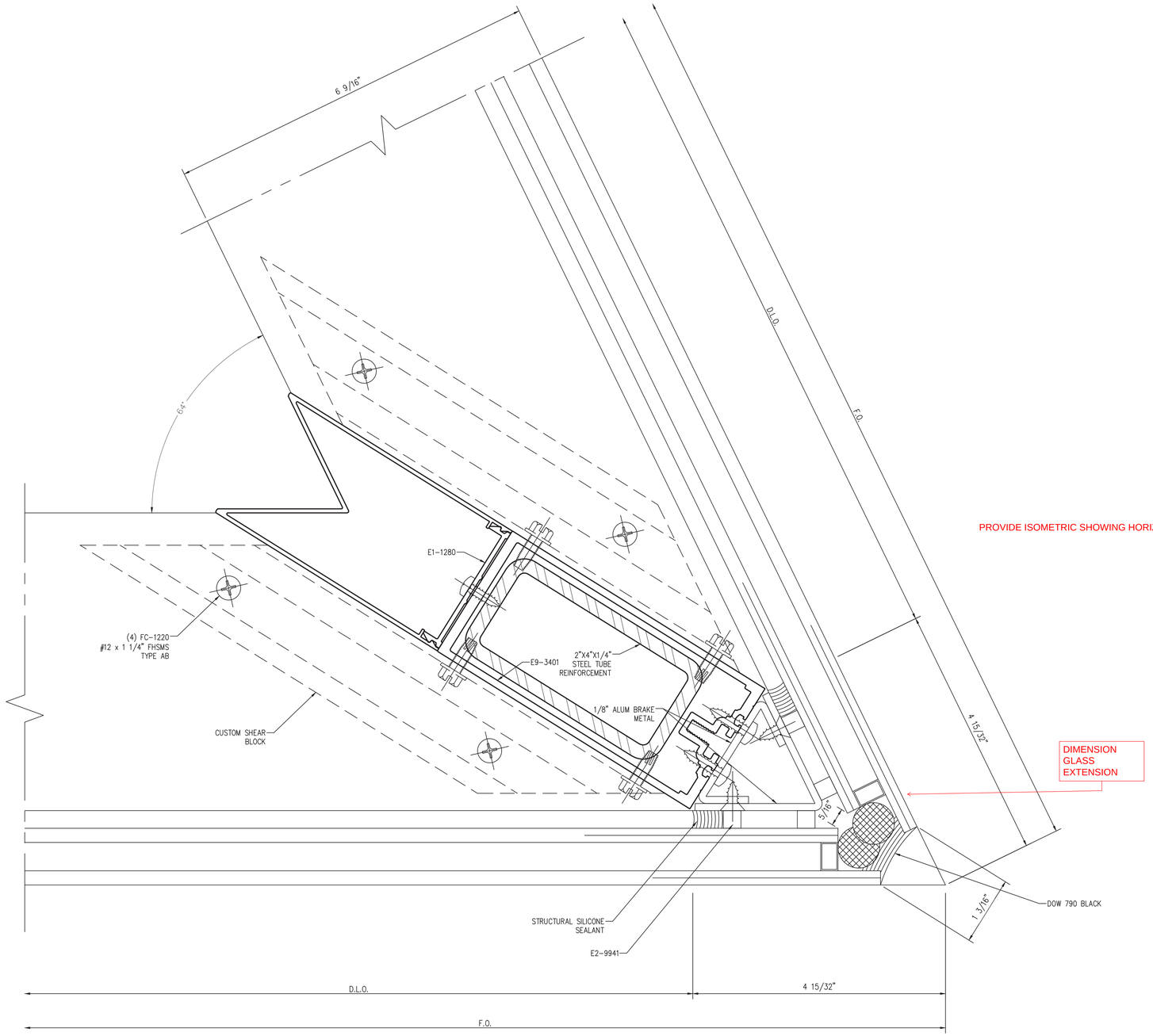

PROVIDE ISOMETRIC SHOWING HORIZONTAL AT THIS LOCATION

DIMENSION
GLASS
EXTENSION

1 CORNER DETAIL
Scale: 1:1

NGG LTD

NGG LTD, INCORPORATED
1850 Craigshire Road Suite 202
St. Louis, Missouri 63146

Tel 314-336-2515
Fax 314-336-2521

Professional Seal

Sub. No.	Rev. No.	Date	Drawn By	Submitted/Revision Description
3	2	11/8/16	IY	3RD SUBMISSION
2	1	10/19/16	IY	2ND SUBMISSION
1	–	8/10/16	IY	1ST SUBMISSION

Proprietary Notice

This drawing sheet and contents herein are property of NGG. Use of this drawing, contents or design concepts for purposes other than estimating, drawing preparation and/or manufacturing for NGG shall be cause for legal recourse by NGG.

Project Name
WEBSTER UNIVERSITY
Location
St. Louis, Missouri

Architect
CANNON DESIGN
Location
St. Louis, MO

Contractor
PARIC
Location
St. Louis, Missouri

Owner
WEBSTER UNIVERSITY
Location
St. Louis, Missouri

Drawn Date	Scale
8/10/16	AS NOTED

NGG Project No.

Drawing Title
DETAILS

Drawn By	Sheet No.
IY	405

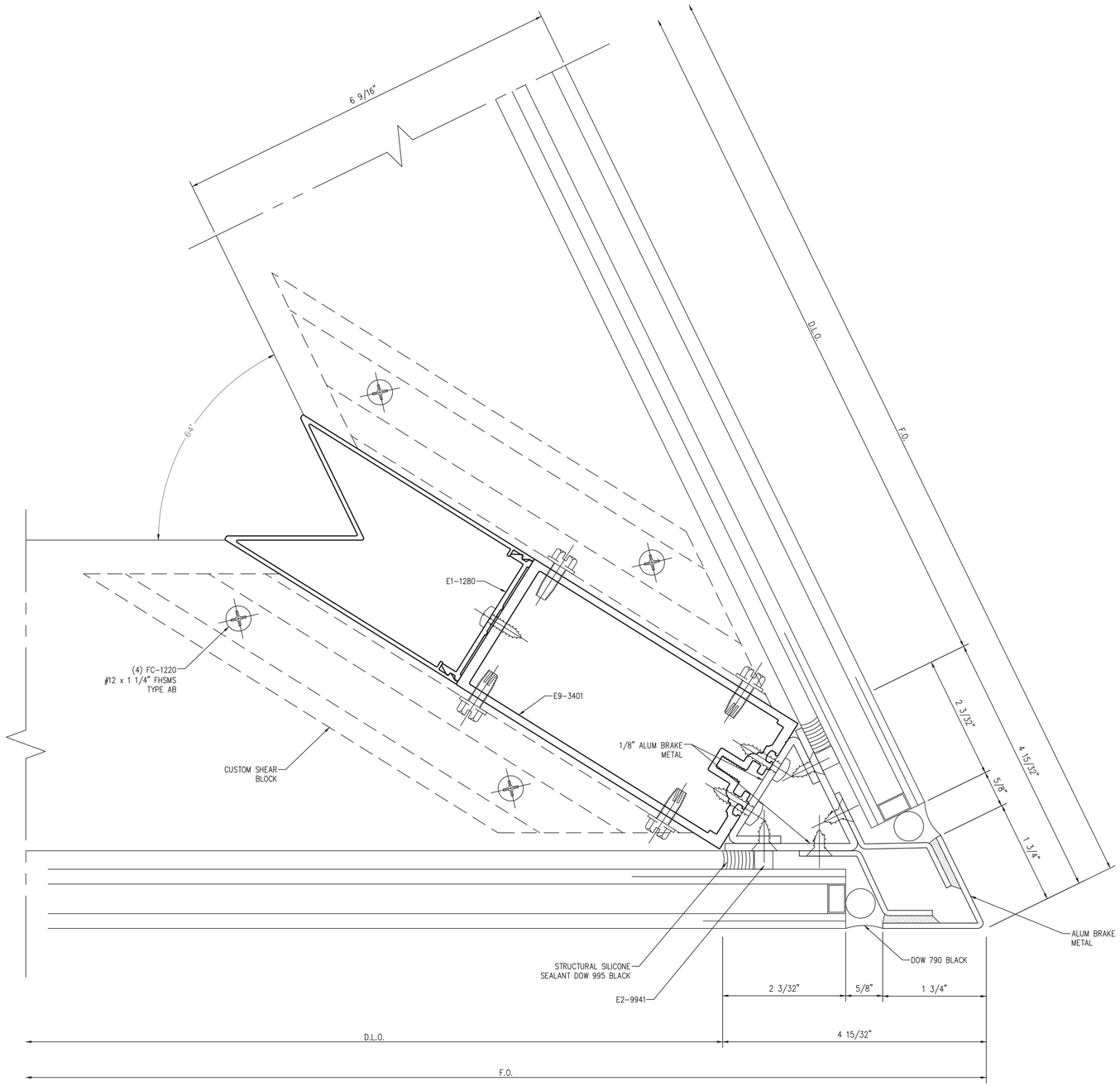

1 CORNER DETAIL

Scale: 1:1

NGG LTD

NGG LTD, INCORPORATED
1850 Craigshire Road Suite 202
St. Louis, Missouri 63146

Tel 314-336-2515
Fax 314-336-2521

Professional Seal

Sub. No.	Rev. No.	Date	Drawn By	Submitted/Revision Description
3	2	11/8/16	IY	3RD SUBMISSION
2	1	10/19/16	IY	2ND SUBMISSION
1	–	8/10/16	IY	1ST SUBMISSION

Proprietary Notice

This drawing sheet and contents herein are property of NGG. Use of this drawing, contents or design concepts for purposes other than estimating, drawing preparation and/or manufacturing for NGG shall be cause for legal recourse by NGG.

Project Name
WEBSTER UNIVERSITY
Location
St. Louis, Missouri

Architect
CANNON DESIGN
Location
St. Louis, MO

Contractor
PARIC
Location
St. Louis, Missouri

Owner
WEBSTER UNIVERSITY
Location
St. Louis, Missouri

Drawn Date	Scale
8/10/16	AS NOTED

NGG Project No.

Drawing Title
DETAILS

Drawn By	Sheet No.
IY	406

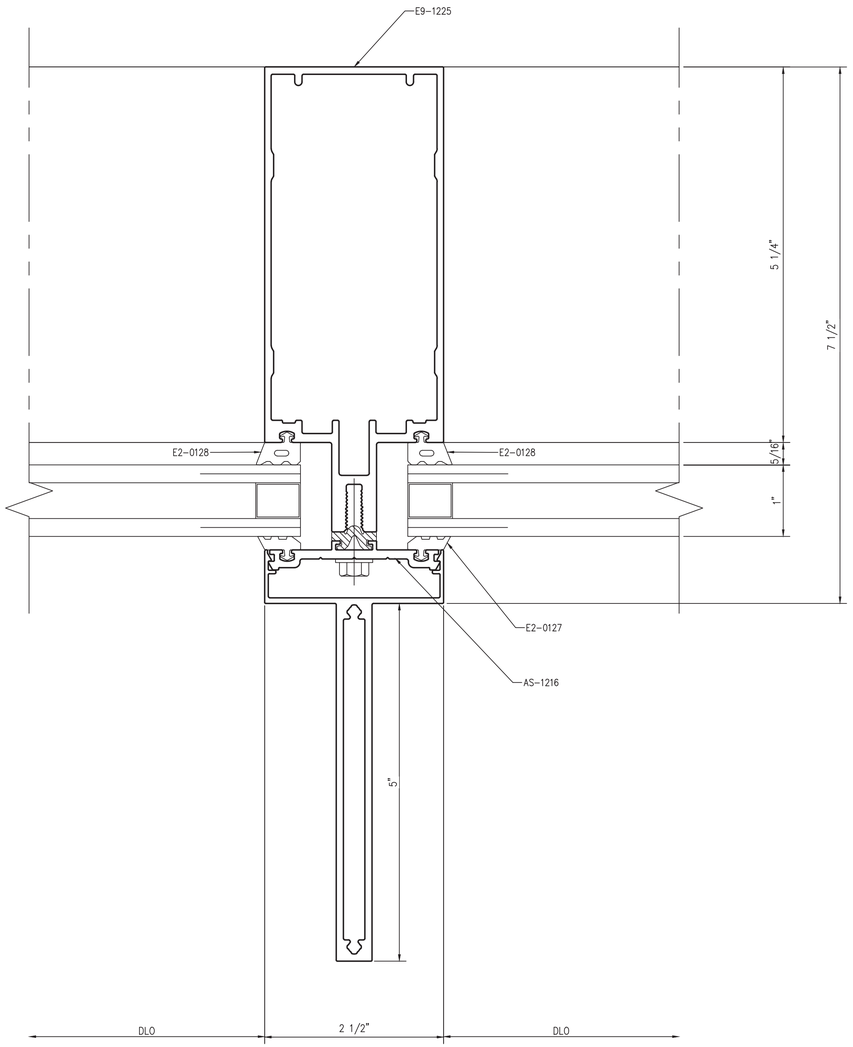

1 TYP. MULLION

Scale: 1:1

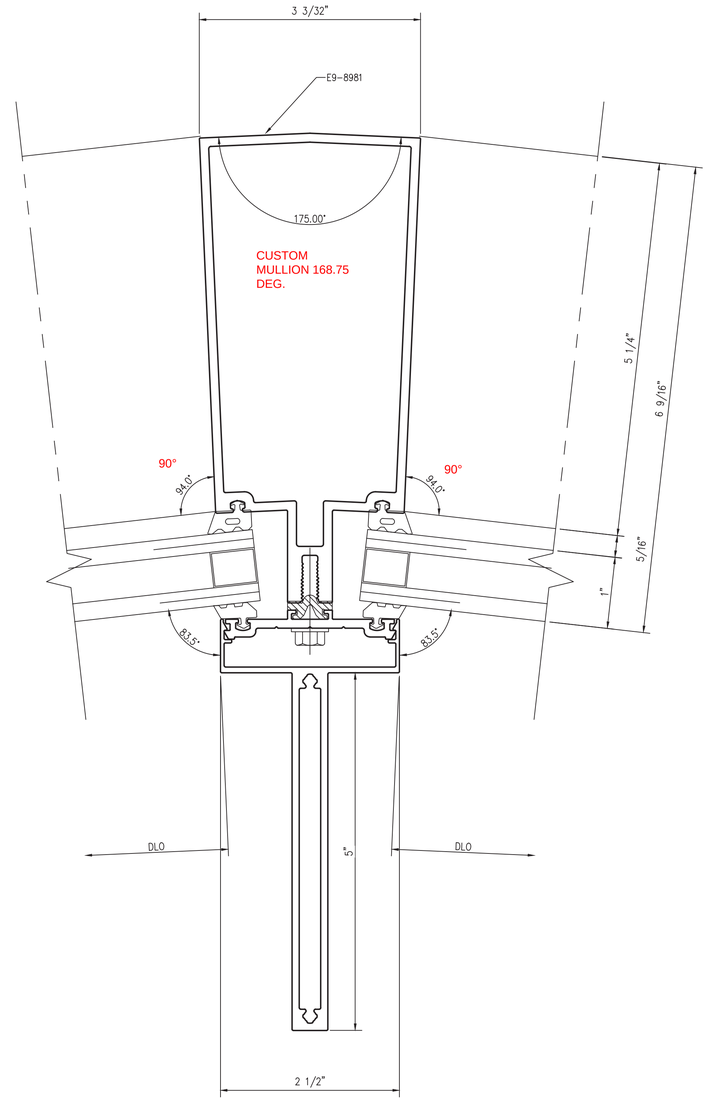

UPDATE DETAIL
PER DISCUSION
AT MEETING ON
SHEET 206

2 TAPERED MULLION

Scale: 1:1

NGG LTD

NGG LTD, INCORPORATED
1850 Craigshire Road Suite 202
St. Louis, Missouri 63146

Tel 314-336-2515
Fax 314-336-2521

Professional Seal

Sub. No.	Rev. No.	Date	Drawn By	Submitted/Revision Description
3	2	11/8/16	IY	3RD SUBMISSION
2	1	10/19/16	IY	2ND SUBMISSION
1	–	8/10/16	IY	1ST SUBMISSION

Proprietary Notice

This drawing sheet and contents herein are property of NGG. Use of this drawing, contents or design concepts for purposes other than estimating, drawing preparation and/or manufacturing for NGG shall be cause for legal recourse by NGG.

Project Name
WEBSTER UNIVERSITY
Location
St. Louis, Missouri

Architect
CANNON DESIGN
Location
St. Louis, MO

Contractor
PARIC
Location
St. Louis, Missouri

Owner
WEBSTER UNIVERSITY
Location
St. Louis, Missouri

Drawn Date	Scale
8/10/16	AS NOTED

NGG Project No.

Drawing Title
DETAILS

Drawn By	Sheet No.
IY	407

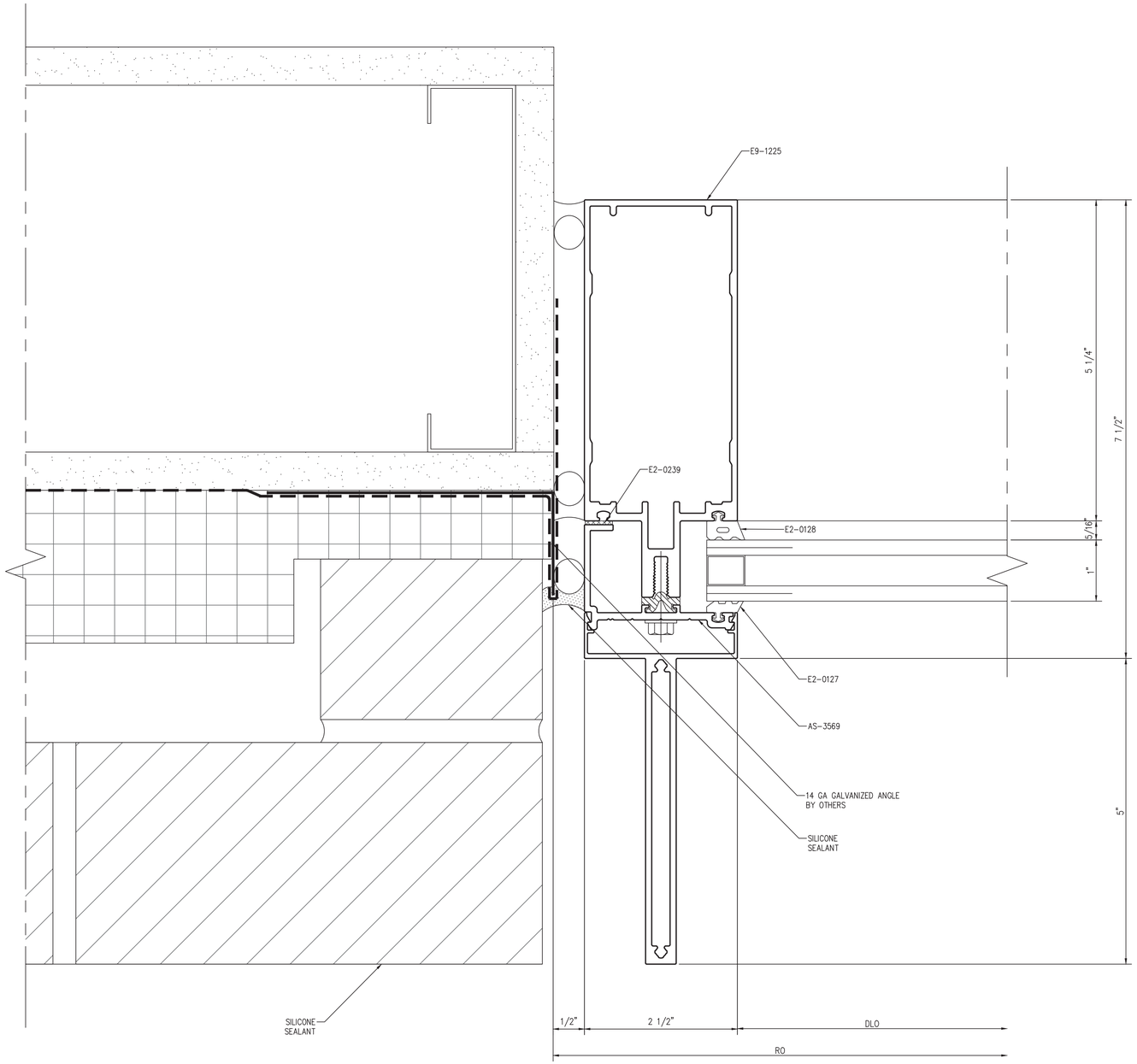

1 JAMB MULLION

REF. 1/A0421, 7/A0422 Scale: 1:1

NGG LTD

NGG LTD, INCORPORATED
1850 Craigshire Road Suite 202
St. Louis, Missouri 63146

Tel 314-336-2515
Fax 314-336-2521

Professional Seal

Sub. No.	Rev. No.	Date	Drawn By	Submitted/Revision Description
3	2	11/8/16	IY	3RD SUBMISSION
2	1	10/19/16	IY	2ND SUBMISSION
1	–	8/10/16	IY	1ST SUBMISSION

Proprietary Notice

This drawing sheet and contents herein are property of NGG. Use of this drawing, contents or design concepts for purposes other than estimating, drawing preparation and/or manufacturing for NGG shall be cause for legal recourse by NGG.

Project Name
WEBSTER UNIVERSITY
Location
St. Louis, Missouri

Architect
CANNON DESIGN
Location
St. Louis, MO

Contractor
PARIC
Location
St. Louis, Missouri

Owner
WEBSTER UNIVERSITY
Location
St. Louis, Missouri

Drawn Date	Scale
8/10/16	AS NOTED

NGG Project No.

Drawing Title
DETAILS

Drawn By	Sheet No.
IY	408

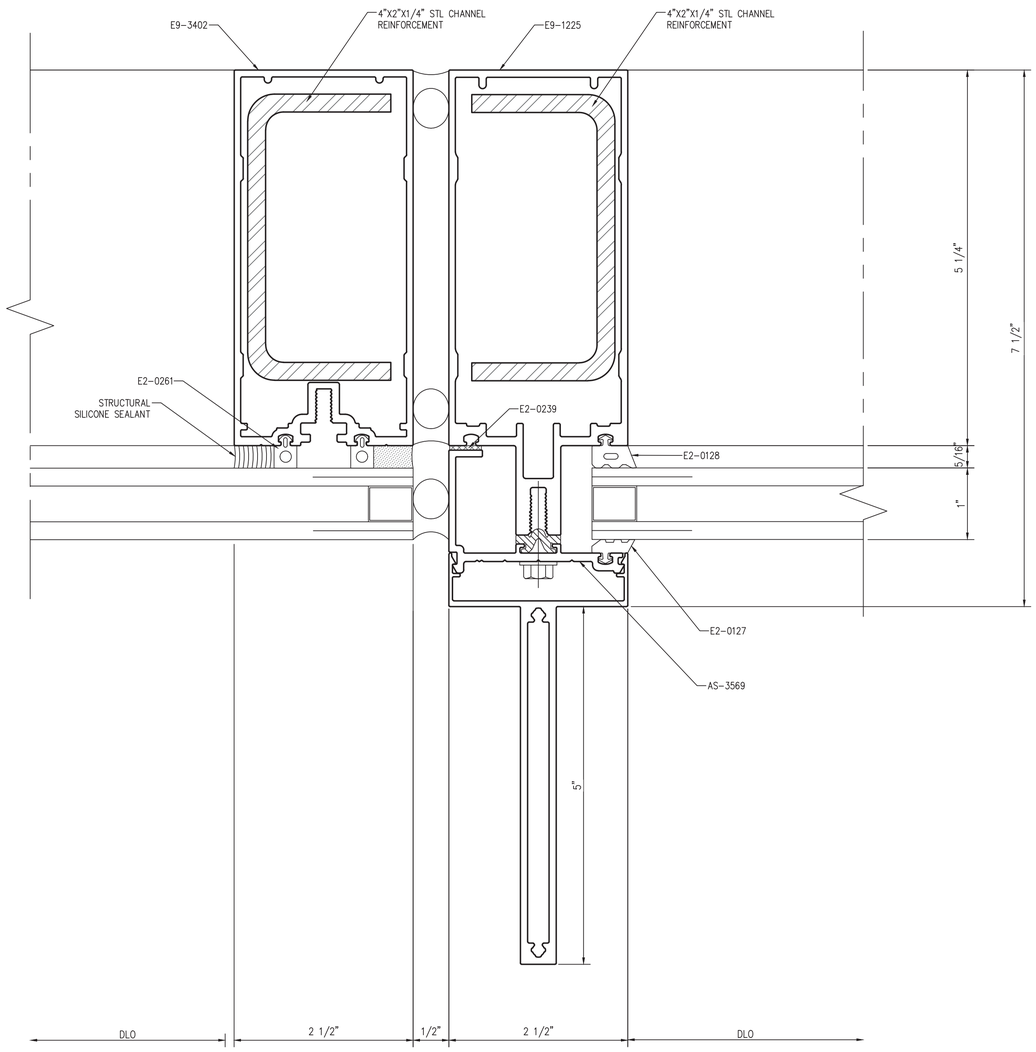

1 MULLION DETAIL
REF. 9/A0455
Scale: 1:1

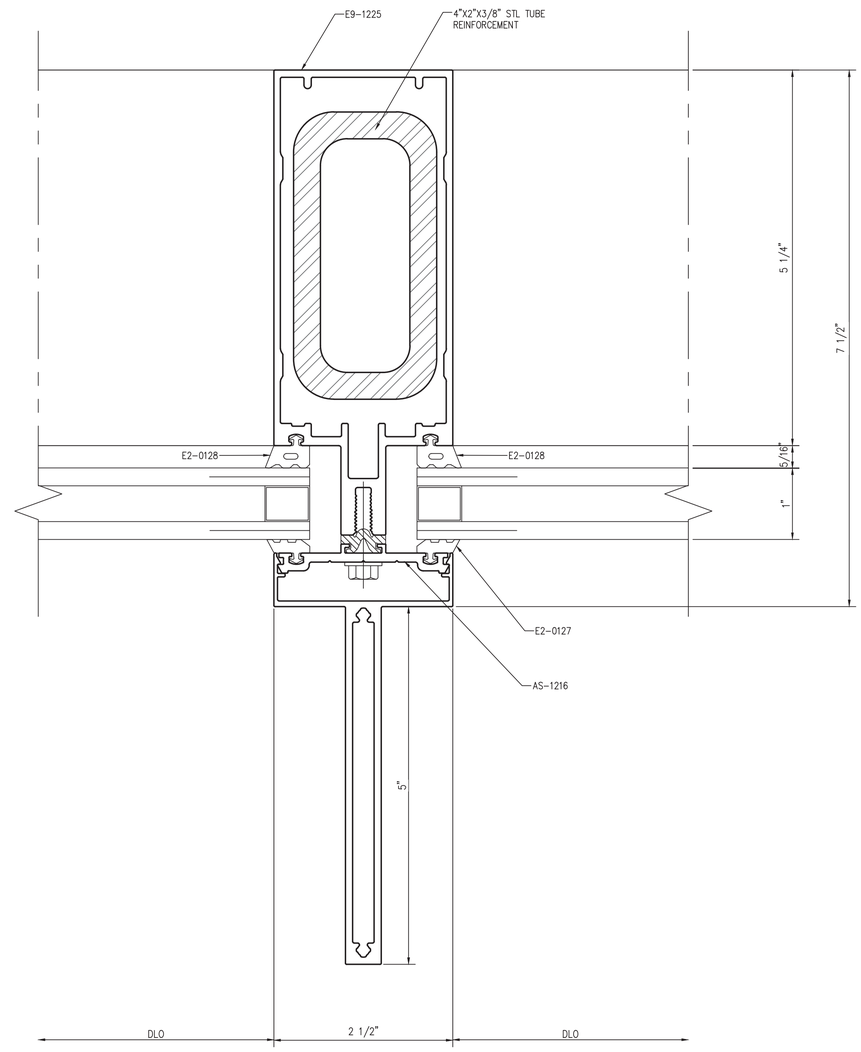

2 TYP. MULLION W/ STEEL
Scale: 1:1

NGG LTD

NGG LTD, INCORPORATED
1850 Craigshire Road Suite 202
St. Louis, Missouri 63146

Tel 314-336-2515
Fax 314-336-2521

Professional Seal

Sub. No.	Rev. No.	Date	Drawn By	Submitted/Revision Description
3	2	11/8/16	IY	3RD SUBMISSION
2	1	10/19/16	IY	2ND SUBMISSION
1	–	8/10/16	IY	1ST SUBMISSION

Proprietary Notice

This drawing sheet and contents herein are property of NGG. Use of this drawing, contents or design concepts for purposes other than estimating, drawing preparation and/or manufacturing for NGG shall be cause for legal recourse by NGG.

Project Name
WEBSTER UNIVERSITY
Location
St. Louis, Missouri

Architect
CANNON DESIGN
Location
St. Louis, MO

Contractor
PARIC
Location
St. Louis, Missouri

Owner
WEBSTER UNIVERSITY
Location
St. Louis, Missouri

Drawn Date	Scale
8/10/16	AS NOTED

NGG Project No.

Drawing Title
DETAILS

Drawn By	Sheet No.
IY	409

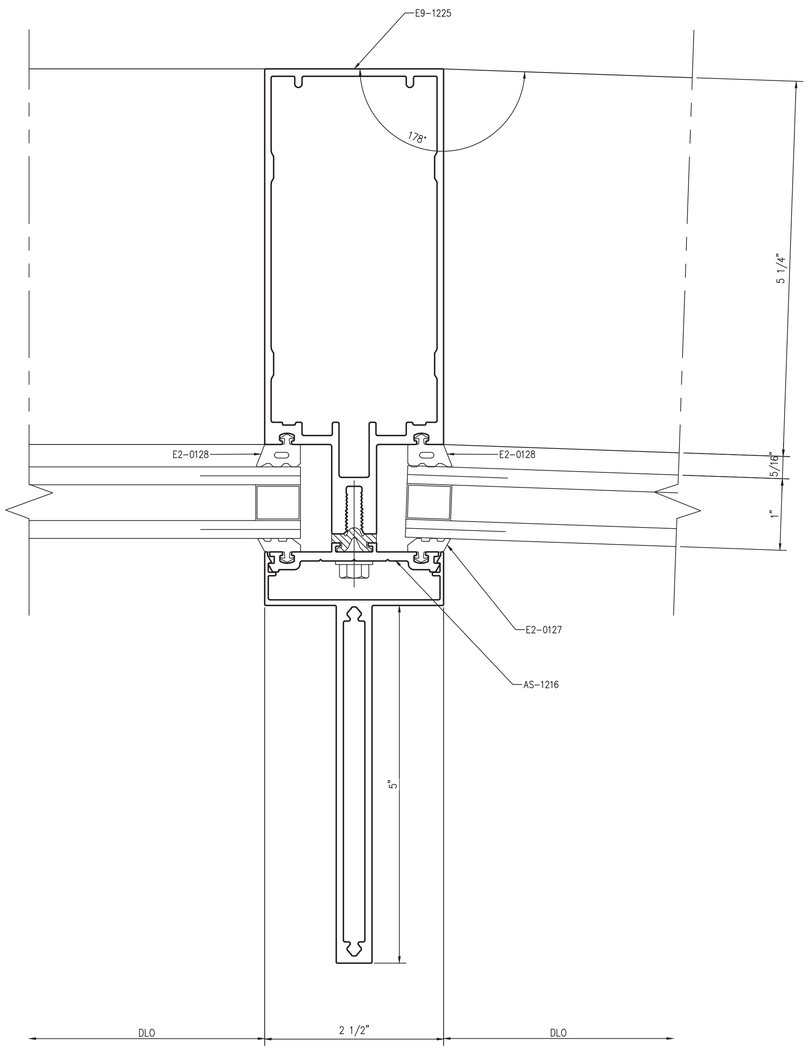

KEY NOTE THESE DETAILS ON THE PLAN SHEETS.

MULLIN FOR SHEET 212

1 TYP. MULLION

Scale: 1:1

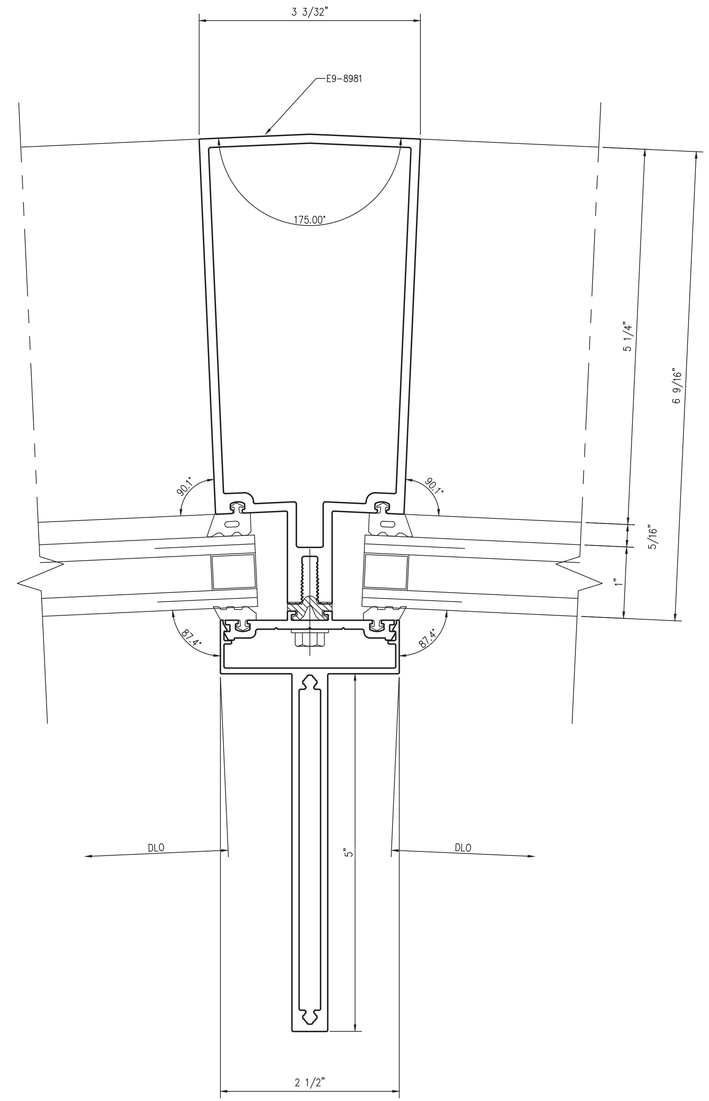

MULLIN FOR SHEET 206

2 TAPERED MULLION

Scale: 1:1

NGG LTD

NGG LTD, INCORPORATED
1850 Craigshire Road Suite 202
St. Louis, Missouri 63146

Tel 314-336-2515
Fax 314-336-2521

Professional Seal

Sub. No.	Rev. No.	Date	Drawn By	Submittal/Revision Description
3	2	11/8/16	IY	3RD SUBMISSION
2	1	10/19/16	IY	2ND SUBMISSION
1	–	8/10/16	IY	1ST SUBMISSION

Proprietary Notice

This drawing sheet and contents herein are property of NGG. Use of this drawing, contents or design concepts for purposes other than estimating, drawing preparation and/or manufacturing for NGG shall be cause for legal recourse by NGG.

Project Name
WEBSTER UNIVERSITY
Location
St. Louis, Missouri

Architect
CANNON DESIGN
Location
St. Louis, MO

Contractor
PARIC
Location
St. Louis, Missouri

Owner
WEBSTER UNIVERSITY
Location
St. Louis, Missouri

Drawn Date	Scale
8/10/16	AS NOTED

NGG Project No.

Drawing Title
DETAILS

Drawn By	Sheet No.
IY	410

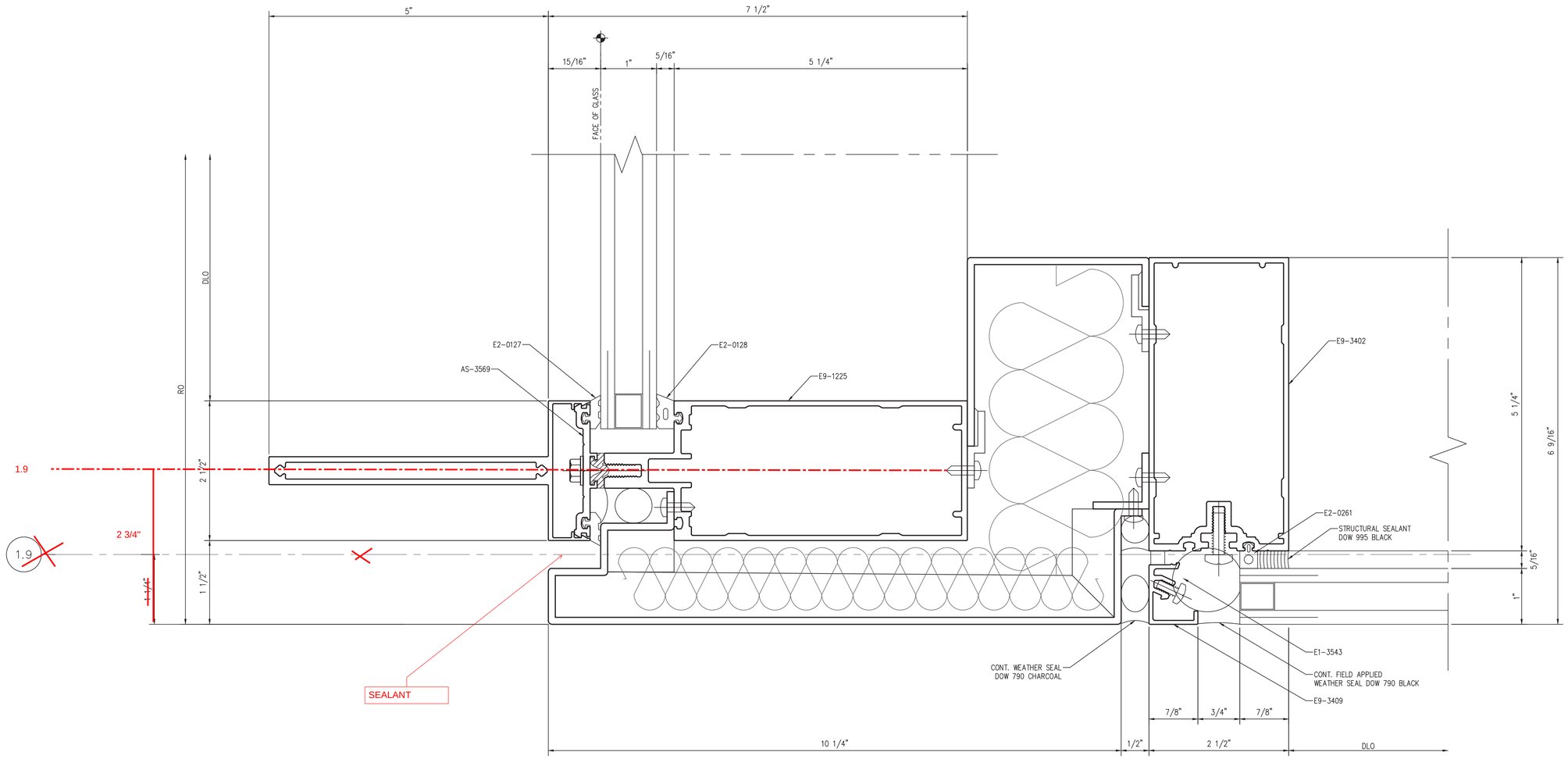

1 CORNER DETAIL

Scale: 1:1

NGG LTD

NGG LTD, INCORPORATED
1850 Craigshire Road Suite 202
St. Louis, Missouri 63146

Tel 314-336-2515
Fax 314-336-2521

Professional Seal

Sub. No.	Rev. No.	Date	Drawn By	Submitted/Revision Description
3	2	11/8/16	IY	3RD SUBMISSION
2	1	10/19/16	IY	2ND SUBMISSION
1	–	8/10/16	IY	1ST SUBMISSION

Proprietary Notice

This drawing sheet and contents herein are property of NGG. Use of this drawing, contents or design concepts for purposes other than estimating, drawing preparation and/or manufacturing for NGG shall be cause for legal recourse by NGG.

Project Name
WEBSTER UNIVERSITY
Location
St. Louis, Missouri

Architect
CANNON DESIGN
Location
St. Louis, MO

Contractor
PARIC
Location
St. Louis, Missouri

Owner
WEBSTER UNIVERSITY
Location
St. Louis, Missouri

Drawn Date	Scale
8/10/16	AS NOTED

NGG Project No.

Drawing Title
DETAILS

Drawn By	Sheet No.
IY	411

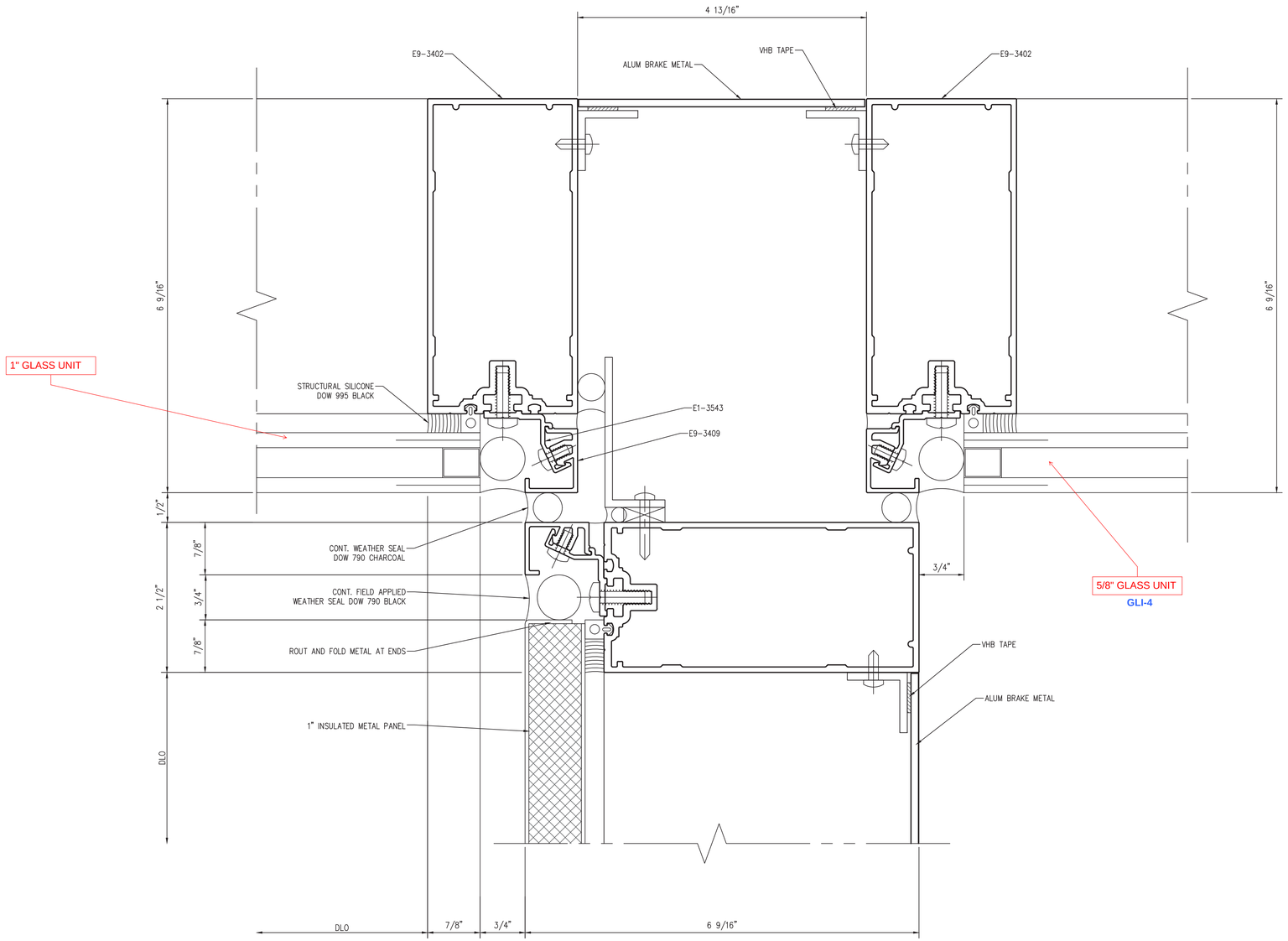

1 CORNER DETAIL
Scale: 1:1

NGG LTD

NGG LTD, INCORPORATED
1850 Craigshire Road Suite 202
St. Louis, Missouri 63146

Tel 314-336-2515
Fax 314-336-2521

Professional Seal

Sub. No.	Rev. No.	Date	Drawn By	Submitted/Revision Description
3	2	11/8/16	IY	3RD SUBMISSION
2	1	10/19/16	IY	2ND SUBMISSION
1	–	8/10/16	IY	1ST SUBMISSION

Proprietary Notice

This drawing sheet and contents herein are property of NGG. Use of this drawing, contents or design concepts for purposes other than estimating, drawing preparation and/or manufacturing for NGG shall be cause for legal recourse by NGG.

Project Name
WEBSTER UNIVERSITY
Location
St. Louis, Missouri

Architect
CANNON DESIGN
Location
St. Louis, MO

Contractor
PARIC
Location
St. Louis, Missouri

Owner
WEBSTER UNIVERSITY
Location
St. Louis, Missouri

Drawn Date	Scale
8/10/16	AS NOTED

NGG Project No.

Drawing Title
DETAILS

Drawn By	Sheet No.
IY	412

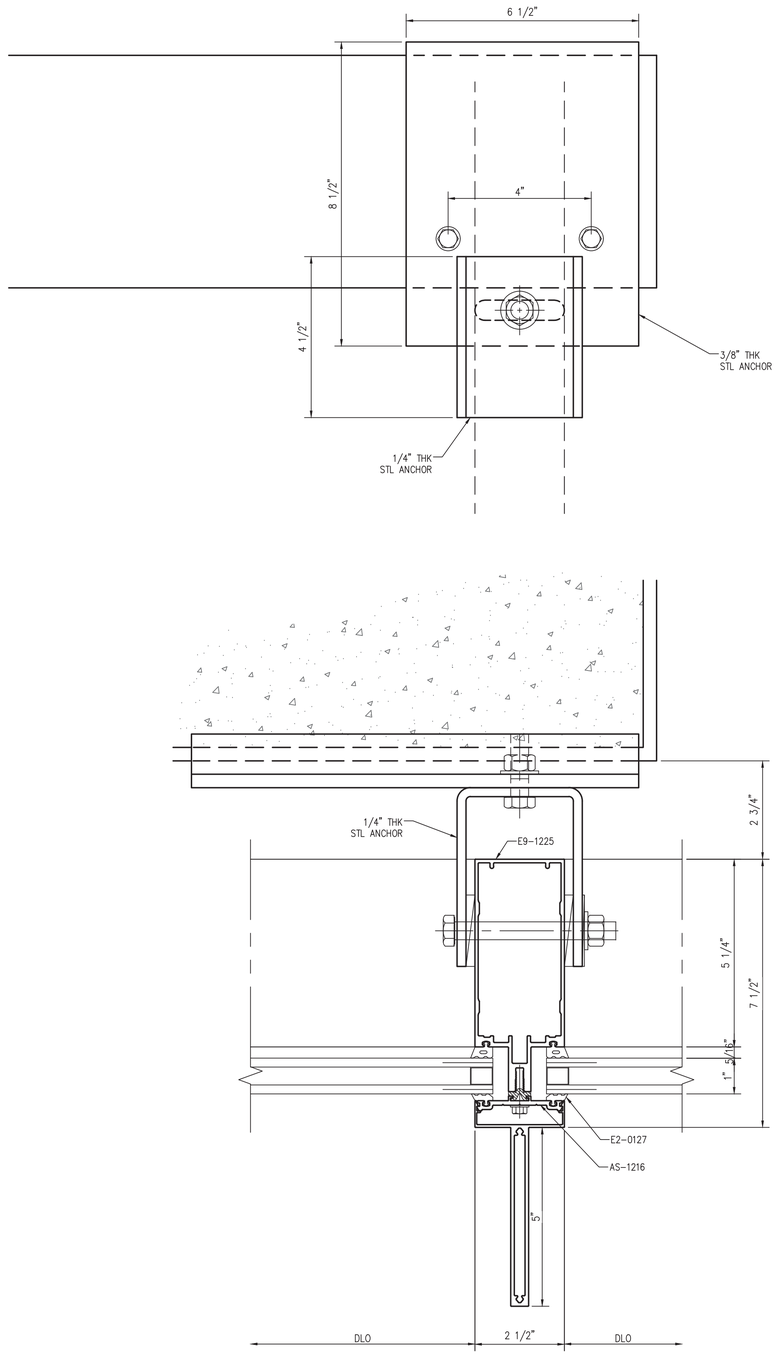

1 WIND LOAD ANCHOR AT LEVEL 4

Scale: 1:1

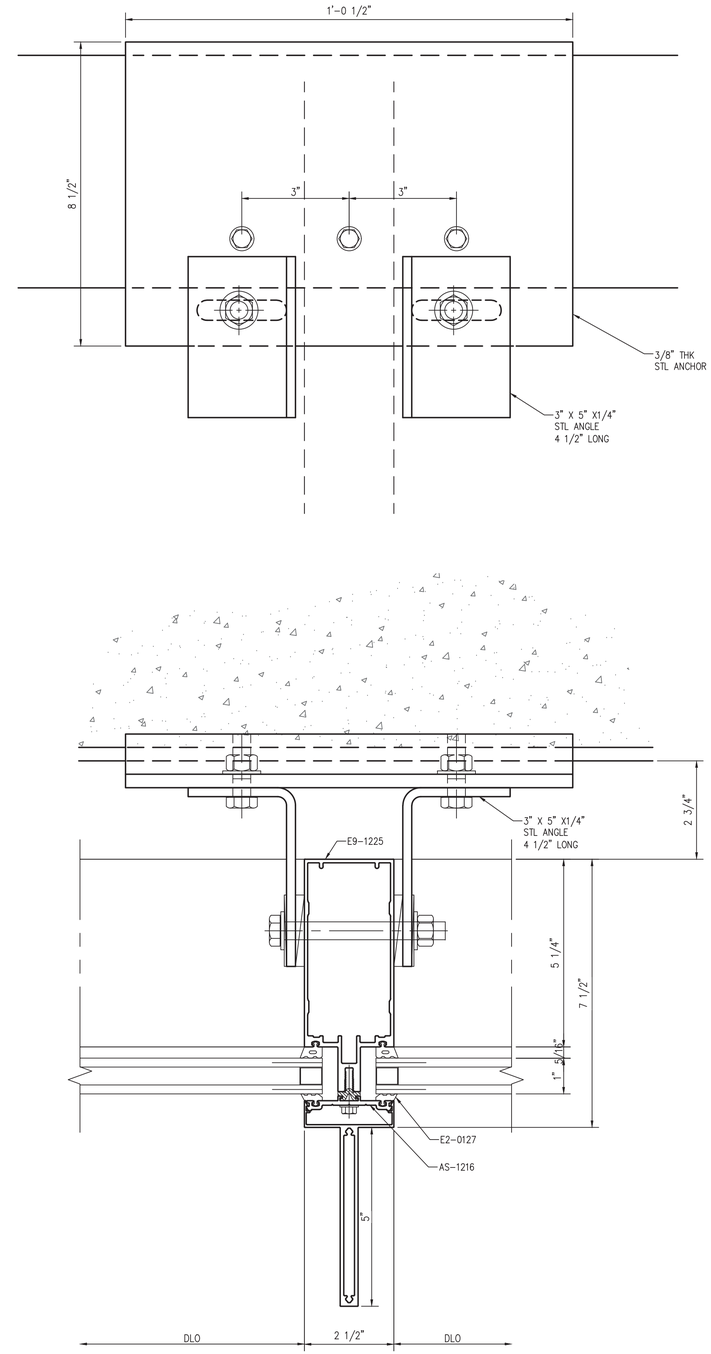

2 WIND LOAD ANCHOR

Scale: 1:1

NGG LTD

NGG LTD, INCORPORATED
1850 Craigshire Road Suite 202
St. Louis, Missouri 63146

Tel 314-336-2515
Fax 314-336-2521

Professional Seal

Sub. No.	Rev. No.	Date	Drawn By	Submitted/Revision Description
3	2	11/8/16	IY	3RD SUBMISSION
2	1	10/19/16	IY	2ND SUBMISSION
1	–	8/10/16	IY	1ST SUBMISSION

Proprietary Notice

This drawing sheet and contents herein are property of NGG. Use of this drawing, contents or design concepts for purposes other than estimating, drawing preparation and/or manufacturing for NGG shall be cause for legal recourse by NGG.

Project Name
WEBSTER UNIVERSITY
Location
St. Louis, Missouri

Architect
CANNON DESIGN
Location
St. Louis, MO

Contractor
PARIC
Location
St. Louis, Missouri

Owner
WEBSTER UNIVERSITY
Location
St. Louis, Missouri

Drawn Date	Scale
8/10/16	AS NOTED

NGG Project No.

Drawing Title
DETAILS

Drawn By	Sheet No.
IY	413

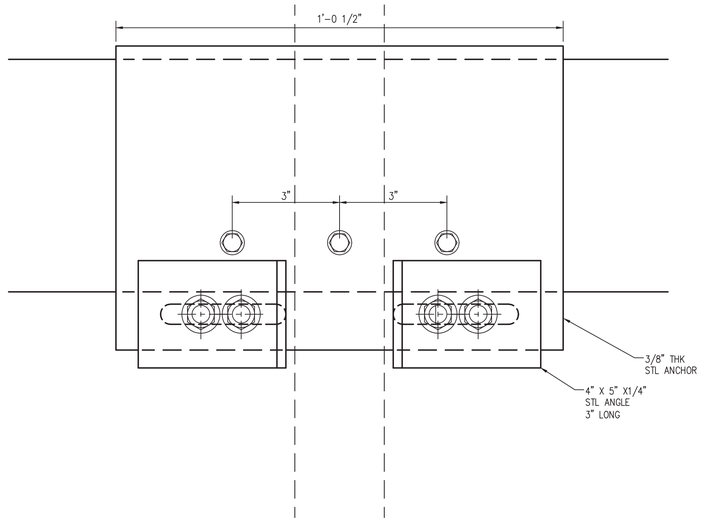

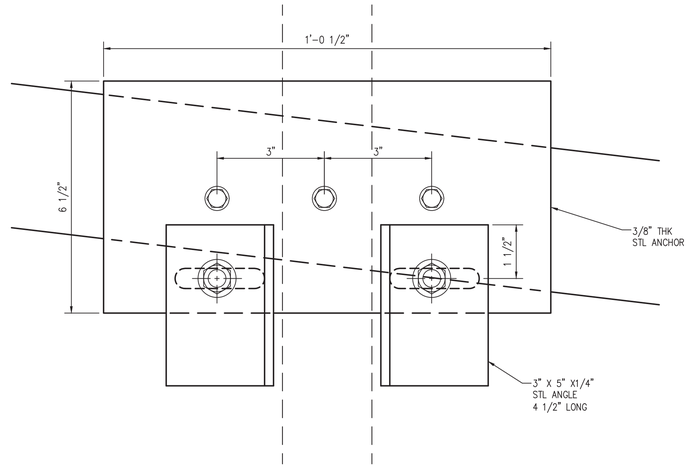

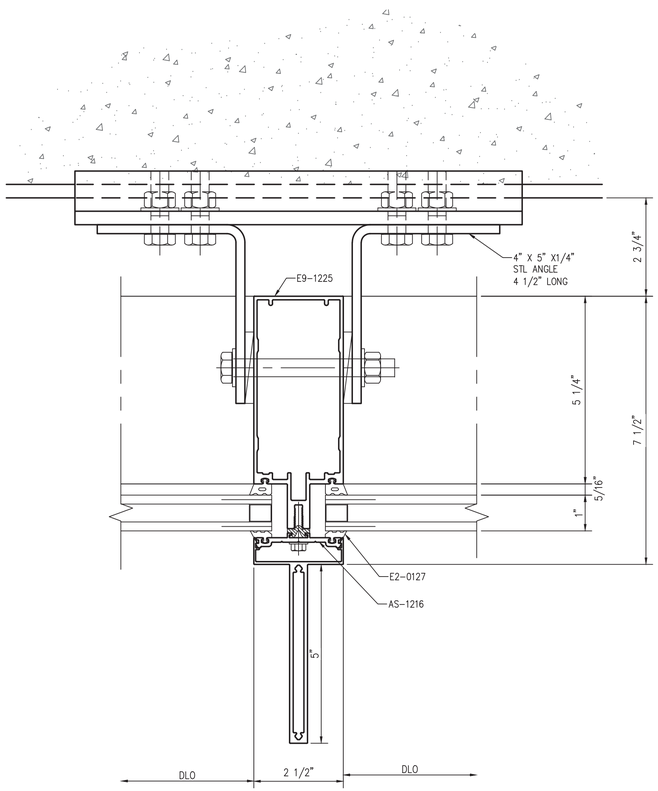

1 DEAD LOAD ANCHOR
Scale: 1:1

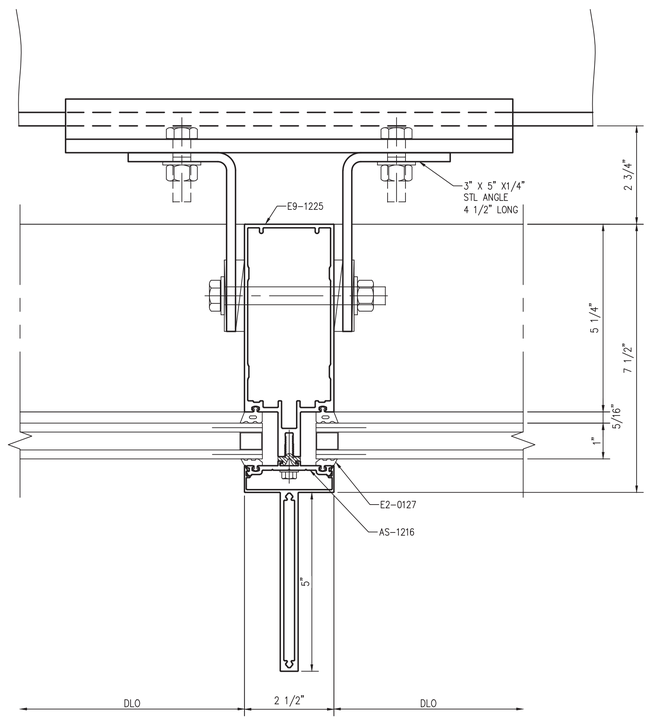

2 WIND LOAD ANCHOR AT ROOF
Scale: 1:1

NGG LTD

NGG LTD, INCORPORATED
1850 Craigshire Road Suite 202
St. Louis, Missouri 63146

Tel 314-336-2515
Fax 314-336-2521

Professional Seal

Sub. No.	Rev. No.	Date	Drawn By	Submitted/Revision Description
3	2	11/8/16	IY	3RD SUBMISSION
2	1	10/19/16	IY	2ND SUBMISSION
1	–	8/10/16	IY	1ST SUBMISSION

Proprietary Notice

This drawing sheet and contents herein are property of NGG. Use of this drawing, contents or design concepts for purposes other than estimating, drawing preparation and/or manufacturing for NGG shall be cause for legal recourse by NGG.

Project Name
WEBSTER UNIVERSITY
Location
St. Louis, Missouri

Architect
CANNON DESIGN
Location
St. Louis, MO

Contractor
PARIC
Location
St. Louis, Missouri

Owner
WEBSTER UNIVERSITY
Location
St. Louis, Missouri

Drawn Date	Scale
8/10/16	AS NOTED

NGG Project No.

Drawing Title
DETAILS

Drawn By	Sheet No.
IY	414

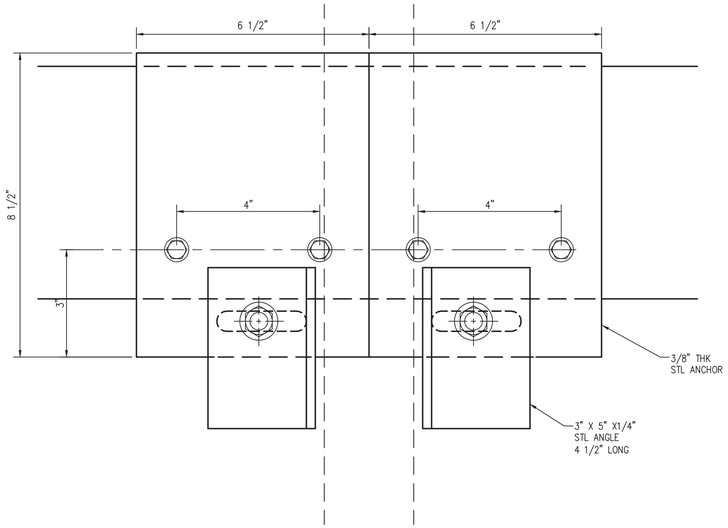

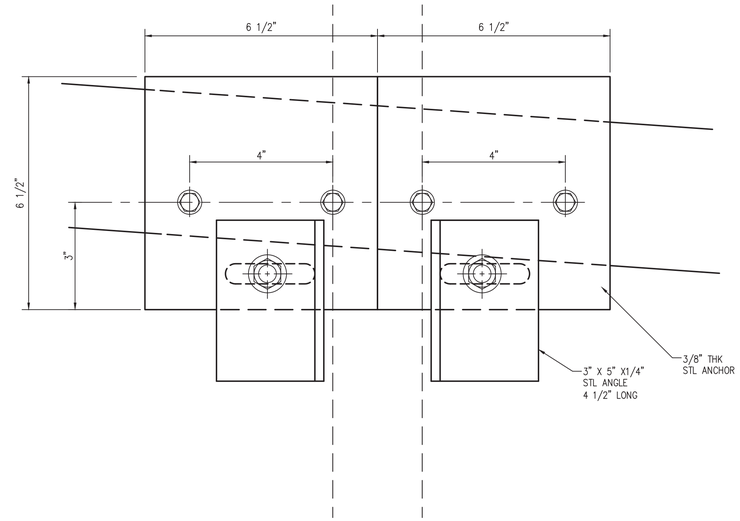

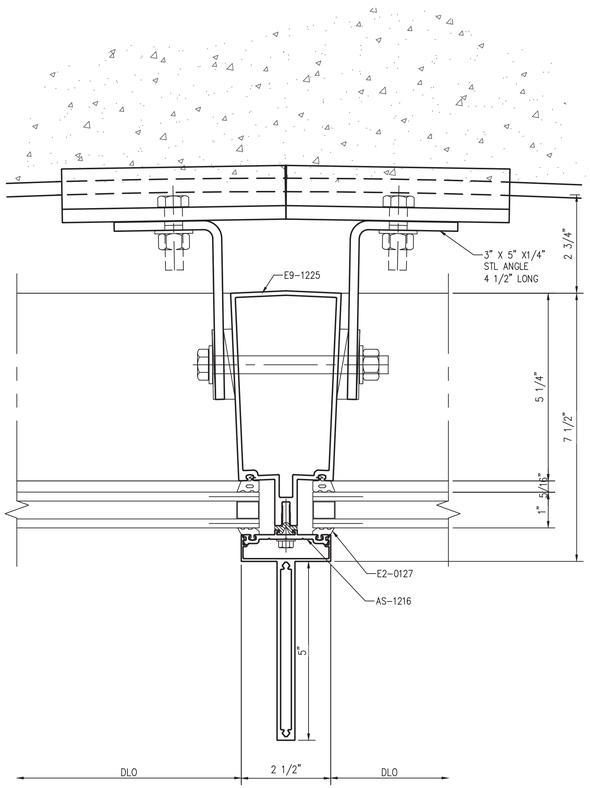

1 WIND LOAD FLOOR ANCHOR
Scale: 1:1

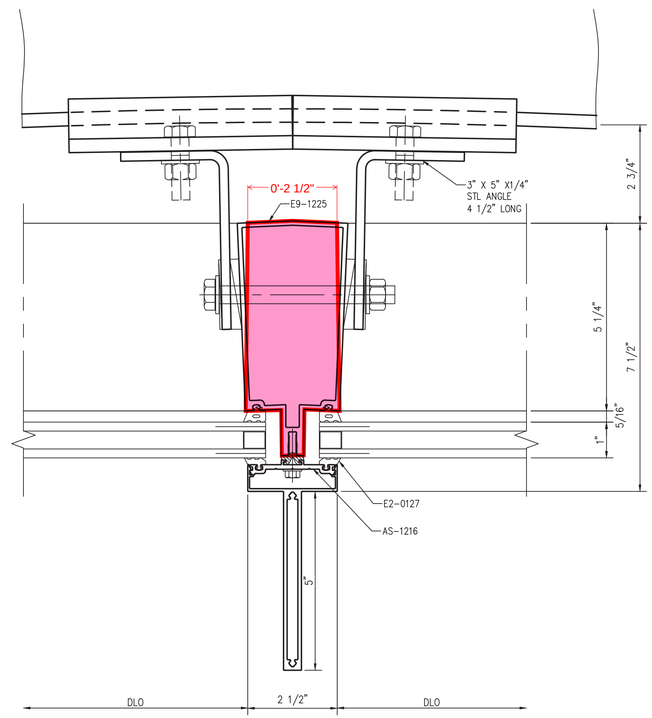

2 WIND LOAD ANCHOR AT ROOF
Scale: 1:1

NGG LTD

NGG LTD, INCORPORATED
1850 Craigshire Road Suite 202
St. Louis, Missouri 63146

Tel 314-336-2515
Fax 314-336-2521

Professional Seal

Sub. No.	Rev. No.	Date	Drawn By	Submitted/Revision Description
3	2	11/8/16	IY	3RD SUBMISSION
2	1	10/19/16	IY	2ND SUBMISSION
1	–	8/10/16	IY	1ST SUBMISSION

Proprietary Notice

This drawing sheet and contents herein are property of NGG. Use of this drawing, contents or design concepts for purposes other than estimating, drawing preparation and/or manufacturing for NGG shall be cause for legal recourse by NGG.

Project Name
WEBSTER UNIVERSITY
Location
St. Louis, Missouri

Architect
CANNON DESIGN
Location
St. Louis, MO

Contractor
PARIC
Location
St. Louis, Missouri

Owner
WEBSTER UNIVERSITY
Location
St. Louis, Missouri

Drawn Date	Scale
8/10/16	AS NOTED

NGG Project No.

Drawing Title
DETAILS

Drawn By	Sheet No.
IY	415

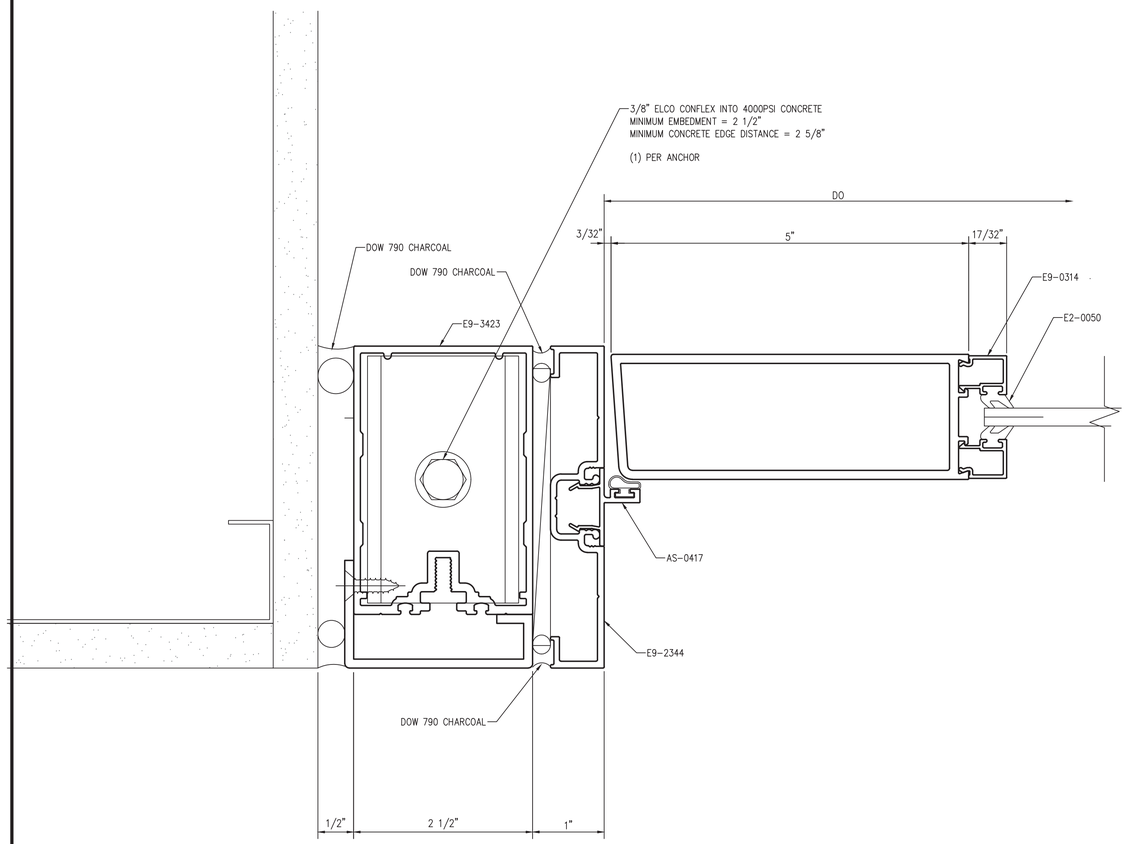

1 DOOR JAMB
Scale: 1:1

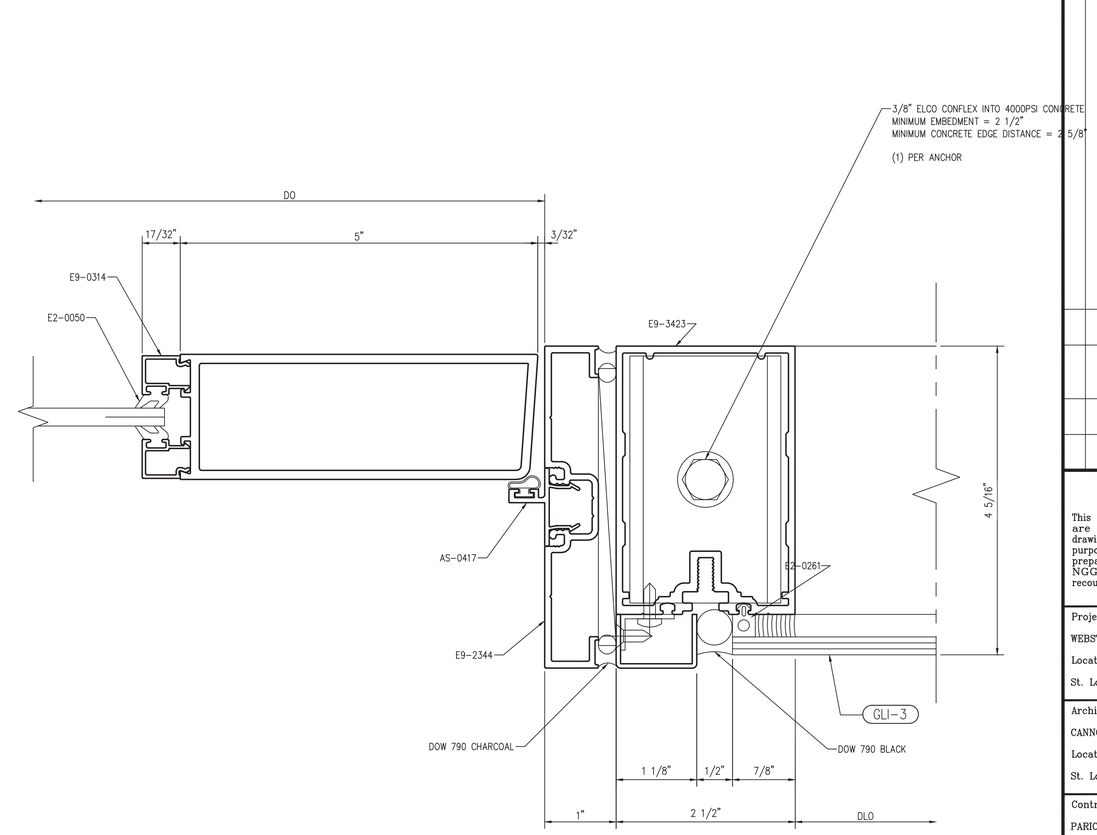

2 DOOR JAMB
Scale: 1:1

NGG LTD

NGG LTD, INCORPORATED
1850 Craigshire Road Suite 202
St. Louis, Missouri 63146

Tel 314-336-2515
Fax 314-336-2521

Professional Seal

Sub. No.	Rev. No.	Date	Drawn By	Submitted/Revision Description
3	2	11/8/16	IY	3RD SUBMISSION
2	1	10/19/16	IY	2ND SUBMISSION
1	–	8/10/16	IY	1ST SUBMISSION

Proprietary Notice

This drawing sheet and contents herein are property of NGG. Use of this drawing, contents or design concepts for purposes other than estimating, drawing preparation and/or manufacturing for NGG shall be cause for legal recourse by NGG.

Project Name
WEBSTER UNIVERSITY
Location
St. Louis, Missouri

Architect
CANNON DESIGN
Location
St. Louis, MO

Contractor
PARIC
Location
St. Louis, Missouri

Owner
WEBSTER UNIVERSITY
Location
St. Louis, Missouri

Drawn Date	Scale
8/10/16	AS NOTED

NGG Project No.

Drawing Title
DETAILS

Drawn By	Sheet No.
IY	416

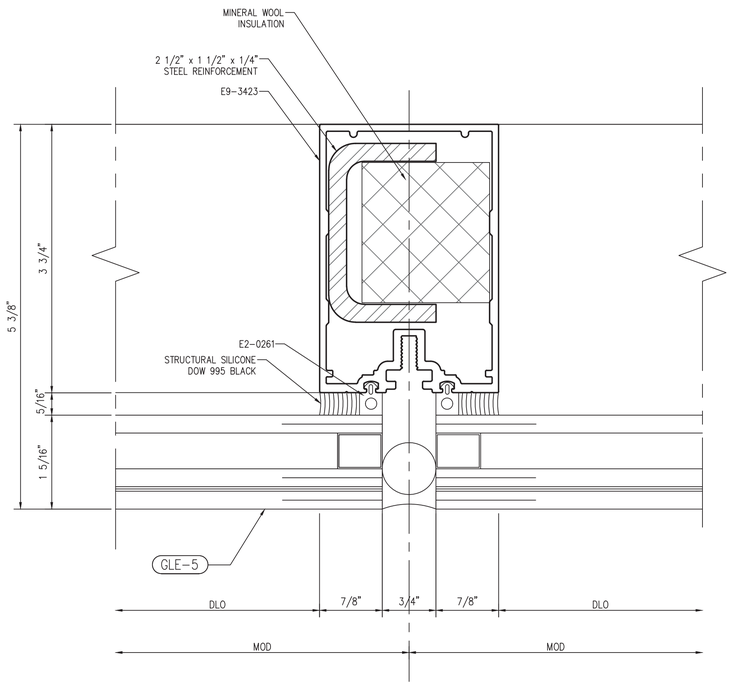

1 SSG MULLION

Scale: 1:1

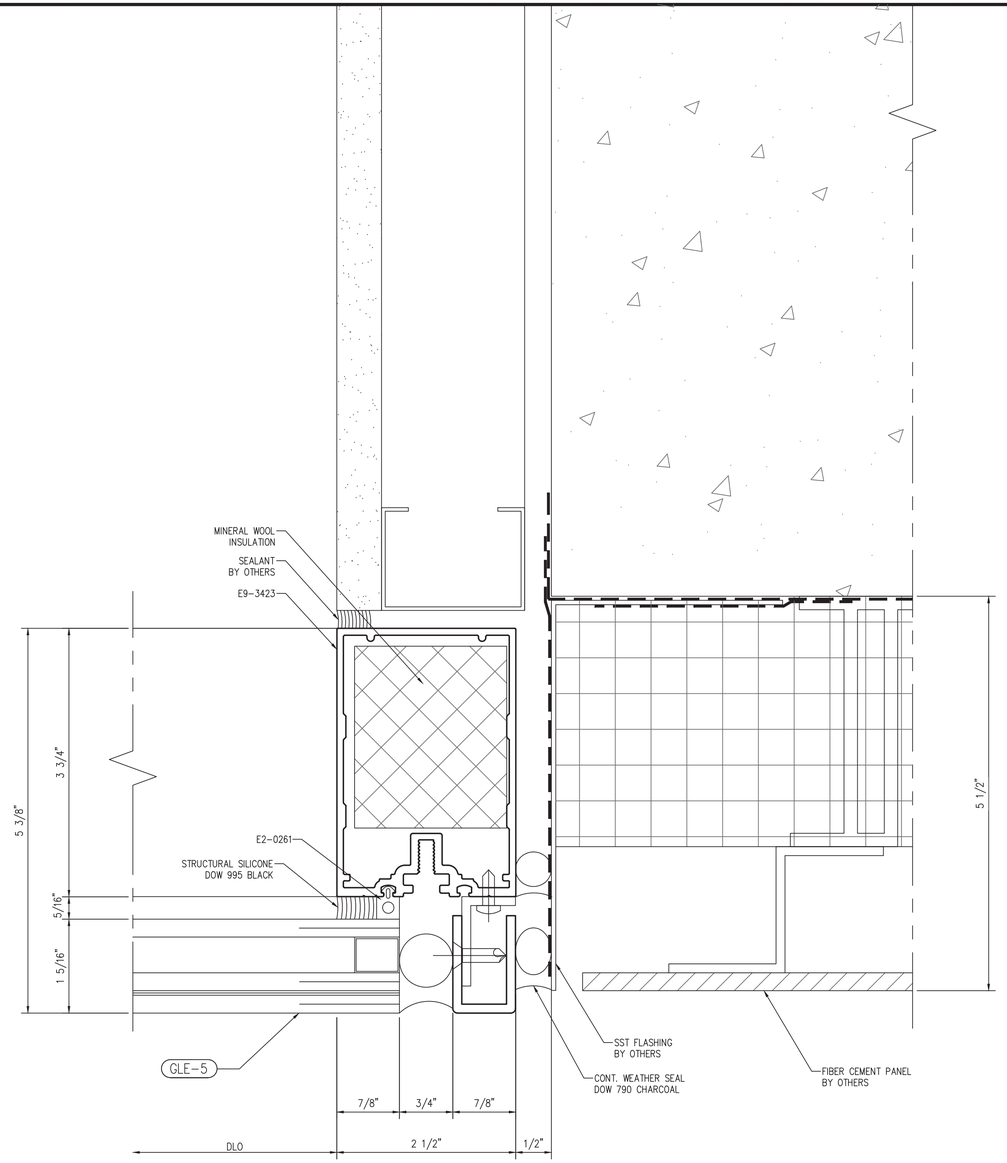

2 JAMB MULLION

REF. 2/A0422

Scale: 1:1

NGG LTD

NGG LTD, INCORPORATED
1850 Craigshire Road Suite 202
St. Louis, Missouri 63146

Tel 314-336-2515
Fax 314-336-2521

Professional Seal

Sub. No.	Rev. No.	Date	Drawn By	Submitted/Revision Description
3	2	11/8/16	IY	3RD SUBMISSION
2	1	10/19/16	IY	2ND SUBMISSION
1	–	5/17/16	IY	1ST SUBMISSION

Proprietary Notice

This drawing sheet and contents herein are property of NGG. Use of this drawing, contents or design concepts for purposes other than estimating, drawing preparation and/or manufacturing for NGG shall be cause for legal recourse by NGG.

Project Name
WEBSTER UNIVERSITY
Location
St. Louis, Missouri

Architect
CANNON DESIGN
Location
St. Louis, MO

Contractor
PARIC
Location
St. Louis, Missouri

Owner
WEBSTER UNIVERSITY
Location
St. Louis, Missouri

Drawn Date	Scale
5/17/16	AS NOTED

NGG Project No.

Drawing Title
DETAILS

Drawn By	Sheet No.
IY	417

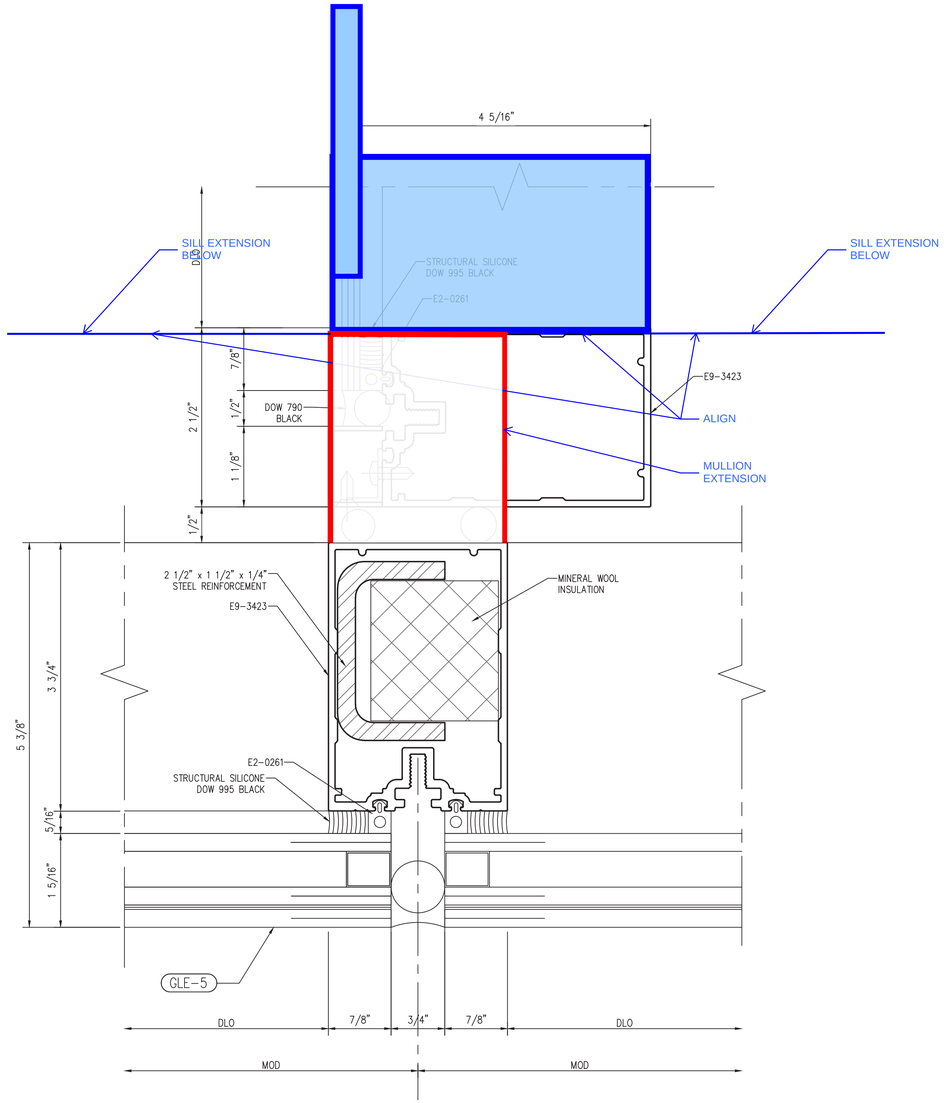

1 MULLION DETAIL
Scale: 1:1

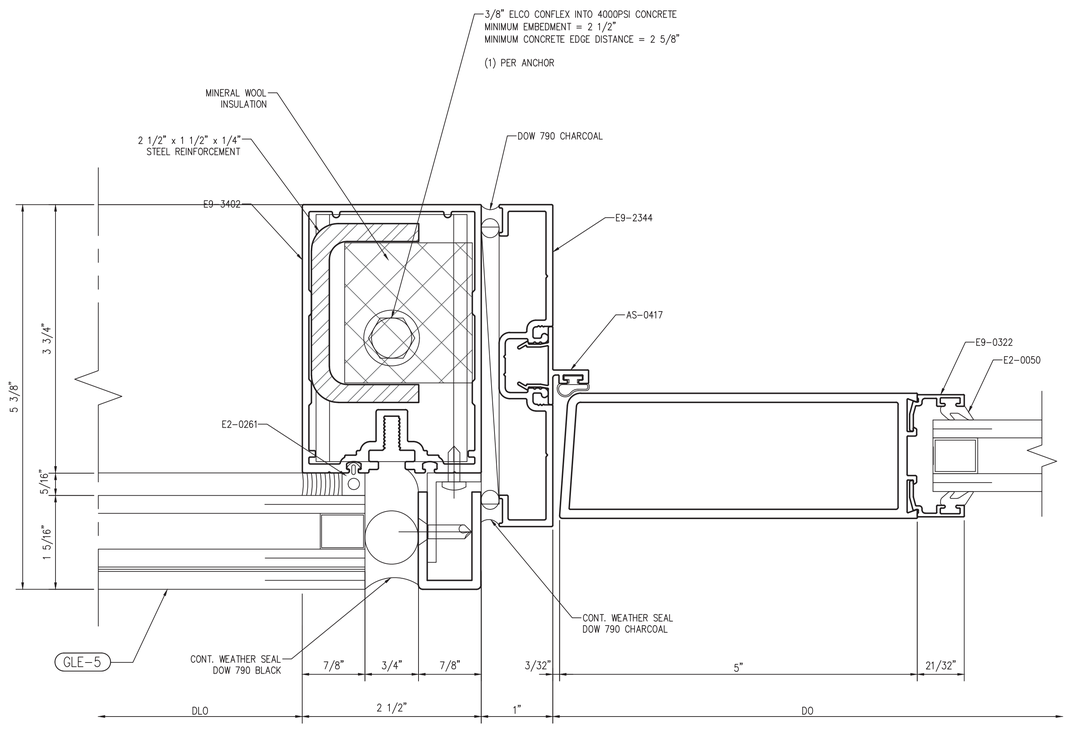

2 DOOR JAMB
Scale: 1:1

NGG LTD

NGG LTD, INCORPORATED
1850 Craigshire Road Suite 202
St. Louis, Missouri 63146

Tel 314-336-2515
Fax 314-336-2521

Professional Seal

Sub. No.	Rev. No.	Date	Drawn By	Submitted/Revision Description
3	2	11/8/16	IY	3RD SUBMISSION
2	1	10/19/16	IY	2ND SUBMISSION
1	–	5/17/16	IY	1ST SUBMISSION

Proprietary Notice

This drawing sheet and contents herein are property of NGG. Use of this drawing, contents or design concepts for purposes other than estimating, drawing preparation and/or manufacturing for NGG shall be cause for legal recourse by NGG.

Project Name
WEBSTER UNIVERSITY
Location
St. Louis, Missouri

Architect
CANNON DESIGN
Location
St. Louis, MO

Contractor
PARIC
Location
St. Louis, Missouri

Owner
WEBSTER UNIVERSITY
Location
St. Louis, Missouri

Drawn Date	Scale
5/17/16	AS NOTED

NGG Project No.

Drawing Title
DETAILS

Drawn By	Sheet No.
IY	418

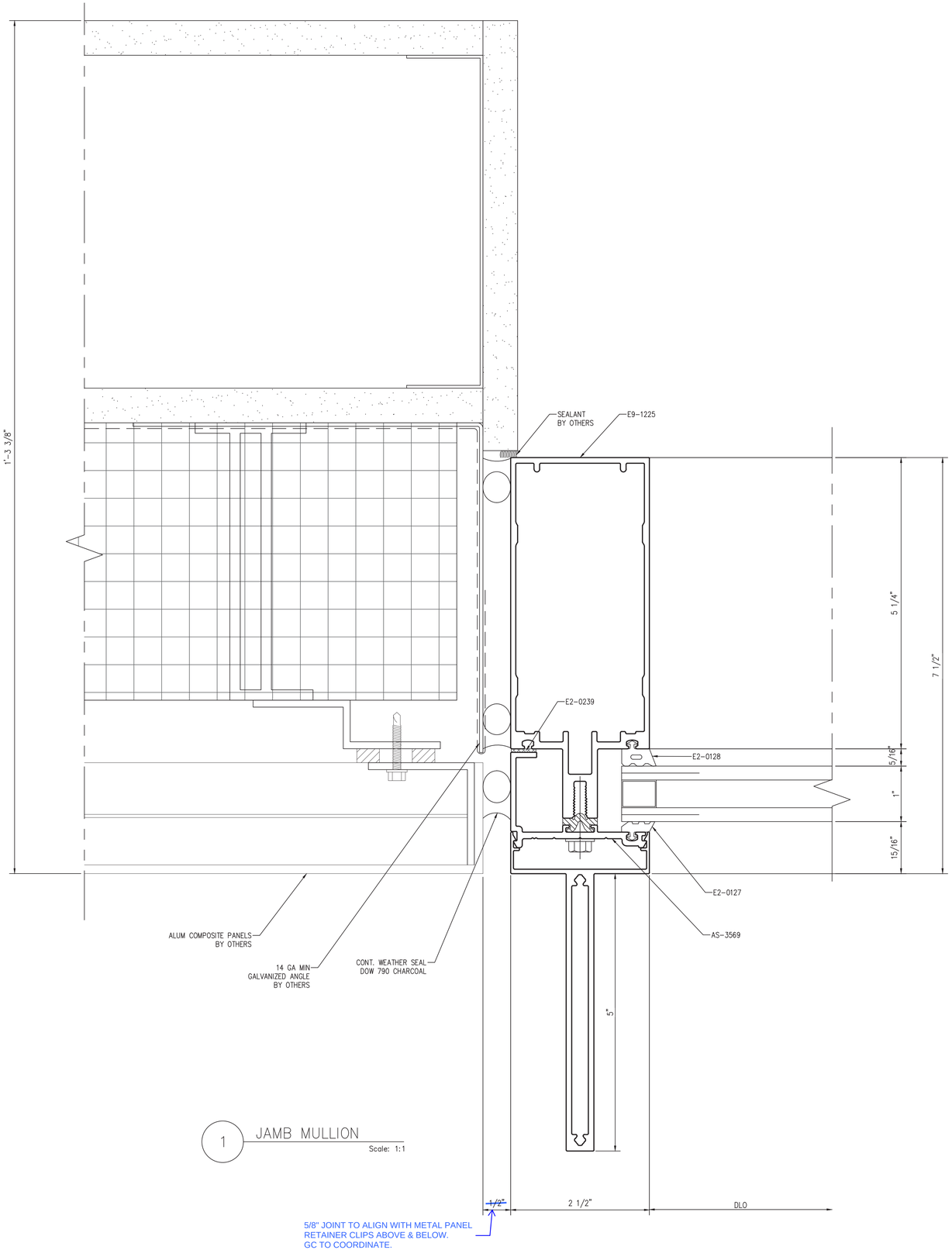

1 JAMB MULLION

Scale: 1:1

NGG LTD

NGG LTD, INCORPORATED
1850 Craigshire Road Suite 202
St. Louis, Missouri 63146

Tel 314-336-2515
Fax 314-336-2521

Professional Seal

Sub. No.	Rev. No.	Date	Drawn By	Submittal/Revision Description
3	2	11/8/16	IY	3RD SUBMISSION
1	–	10/19/16	IY	2ND SUBMISSION

Proprietary Notice

This drawing sheet and contents herein are property of NGG. Use of this drawing, contents or design concepts for purposes other than estimating, drawing preparation and/or manufacturing for NGG shall be cause for legal recourse by NGG.

Project Name
WEBSTER UNIVERSITY
Location
St. Louis, Missouri

Architect
CANNON DESIGN
Location
St. Louis, MO

Contractor
PARIC
Location
St. Louis, Missouri

Owner
WEBSTER UNIVERSITY
Location
St. Louis, Missouri

Drawn Date	Scale
5/17/16	AS NOTED

NGG Project No.

Drawing Title
DETAILS

Drawn By	Sheet No.
IY	419

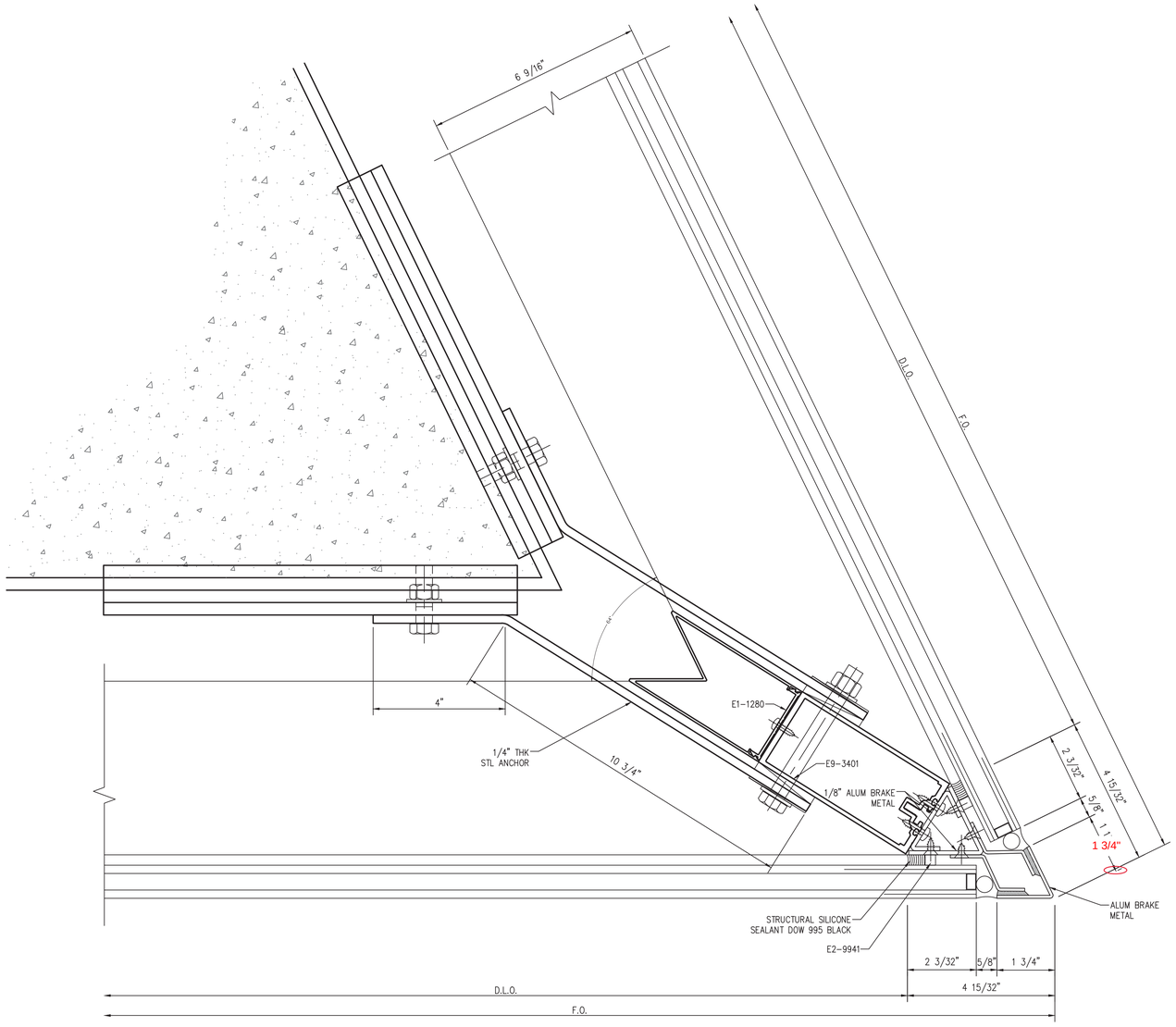

1 CORNER ANCHOR

Scale: 1:1

WIND LOAD @LEVEL 4
DEAD LOAD @ LEVEL 3

NGG LTD

NGG LTD, INCORPORATED
1850 Craigshire Road Suite 202
St. Louis, Missouri 63146

Tel 314-336-2515
Fax 314-336-2521

Professional Seal

Sub. No.	Rev. No.	Date	Drawn By	Submitted/Revision Description
3	2	11/8/16	IY	3RD SUBMISSION
2	–	10/19/16	IY	2ND SUBMISSION

Proprietary Notice

This drawing sheet and contents herein are property of NGG. Use of this drawing, contents or design concepts for purposes other than estimating, drawing preparation and/or manufacturing for NGG shall be cause for legal recourse by NGG.

Project Name
WEBSTER UNIVERSITY
Location
St. Louis, Missouri

Architect
CANNON DESIGN
Location
St. Louis, MO

Contractor
PARIC
Location
St. Louis, Missouri

Owner
WEBSTER UNIVERSITY
Location
St. Louis, Missouri

Drawn Date	Scale
8/10/16	AS NOTED

NGG Project No.

Drawing Title
DETAILS

Drawn By	Sheet No.
IY	420

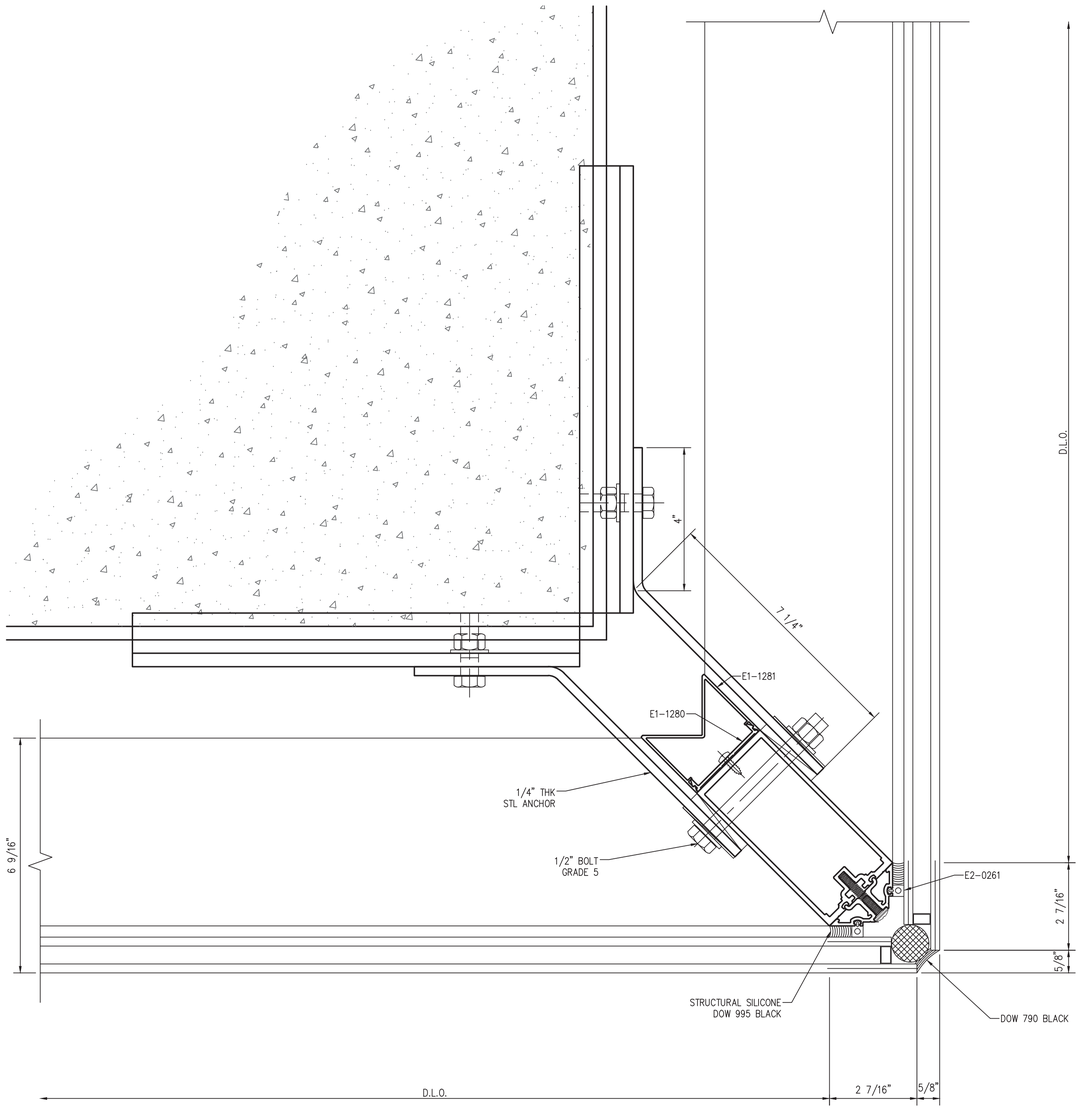

1 CORNER ANCHOR

Scale: 1:1

WIND LOAD @LEVEL 4
DEAD LOAD @ LEVEL 3

NGG LTD

NGG LTD, INCORPORATED
1850 Craigshire Road Suite 202
St. Louis, Missouri 63146

Tel 314-336-2515
Fax 314-336-2521

Professional Seal

Sub. No.	Rev. No.	Date	Drawn By	Submitted/Revision Description
3	2	11/8/16	IY	3RD SUBMISSION
2	–	10/19/16	IY	2ND SUBMISSION

Proprietary Notice

This drawing sheet and contents herein are property of NGG. Use of this drawing, contents or design concepts for purposes other than estimating, drawing preparation and/or manufacturing for NGG shall be cause for legal recourse by NGG.

Project Name
WEBSTER UNIVERSITY
Location
St. Louis, Missouri

Architect
CANNON DESIGN
Location
St. Louis, MO

Contractor
PARIC
Location
St. Louis, Missouri

Owner
WEBSTER UNIVERSITY
Location
St. Louis, Missouri

Drawn Date	Scale
8/10/16	AS NOTED

NGG Project No.

Drawing Title
DETAILS

Drawn By	Sheet No.
IY	421

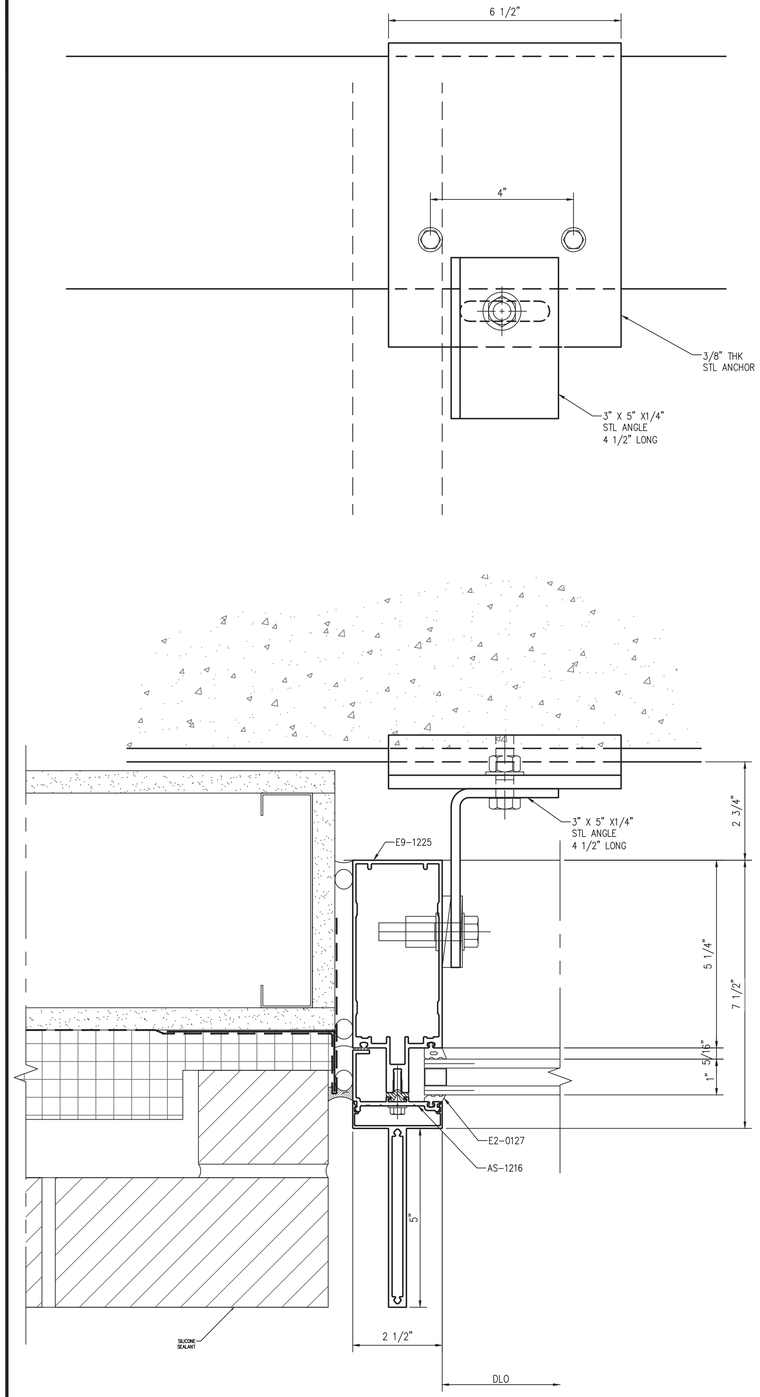

1 FLOOR ANCHOR

Scale: 1:1

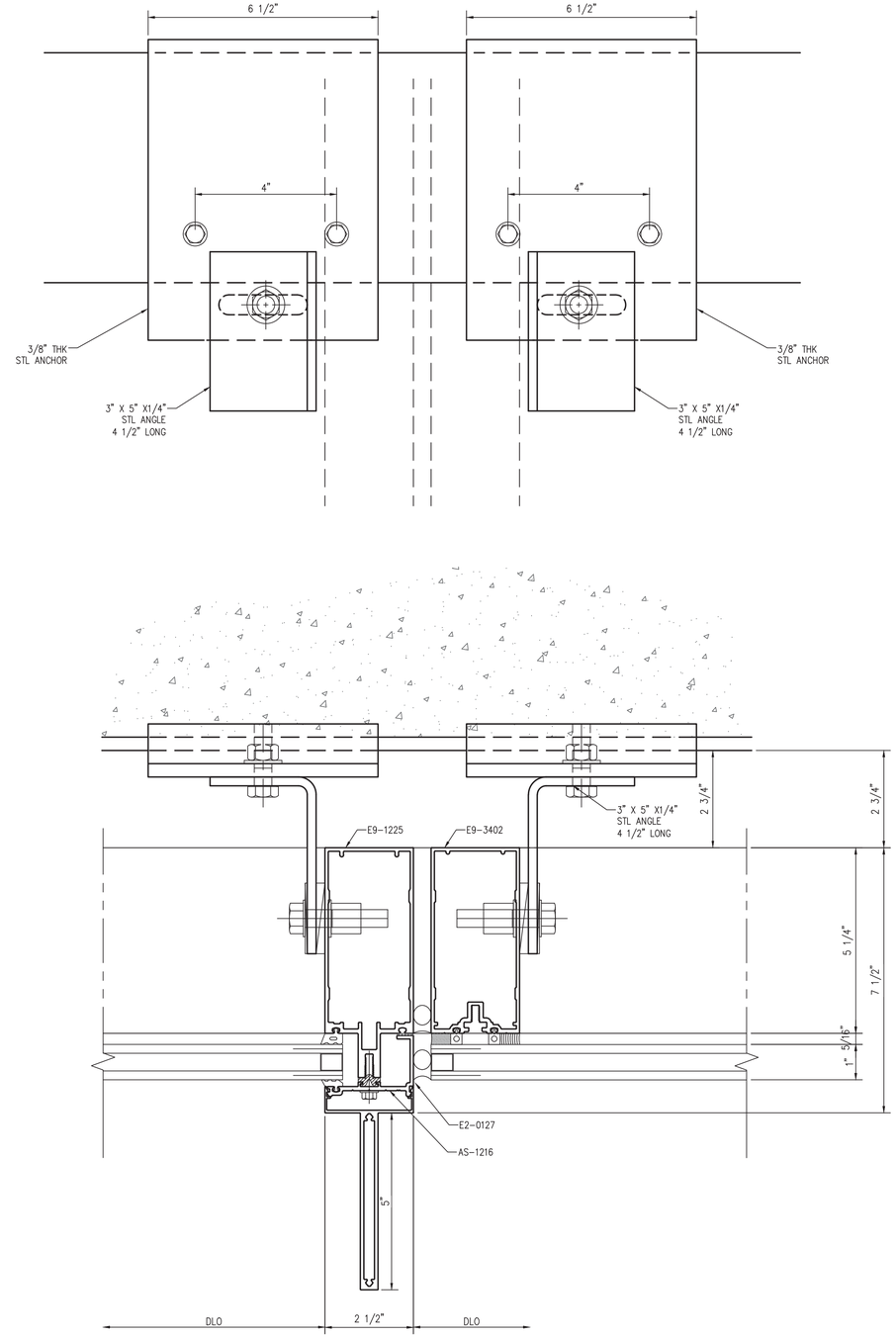

2 FLOOR ANCHOR

Scale: 1:1

NGG LTD

NGG LTD, INCORPORATED
1850 Craigshire Road Suite 202
St. Louis, Missouri 63146

Tel 314-336-2515
Fax 314-336-2521

Professional Seal

Sub. No.	Rev. No.	Date	Drawn By	Submitted/Revision Description
3	2	11/8/16	IY	3RD SUBMISSION
2	-	10/19/16	IY	2ND SUBMISSION

Proprietary Notice

This drawing sheet and contents herein are property of NGG. Use of this drawing, contents or design concepts for purposes other than estimating, drawing preparation and/or manufacturing for NGG shall be cause for legal recourse by NGG.

Project Name
WEBSTER UNIVERSITY
Location
St. Louis, Missouri

Architect
CANNON DESIGN
Location
St. Louis, MO

Contractor
PARIC
Location
St. Louis, Missouri

Owner
WEBSTER UNIVERSITY
Location
St. Louis, Missouri

Drawn Date	Scale
8/10/16	AS NOTED

NGG Project No.

Drawing Title
DETAILS

Drawn By	Sheet No.
IY	422

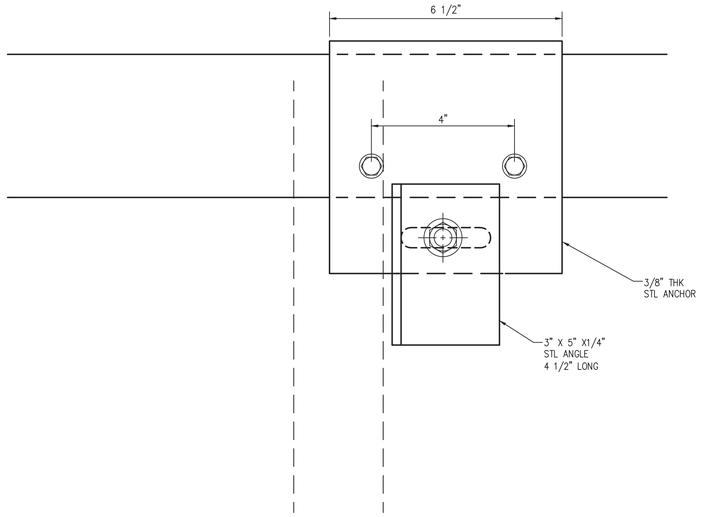

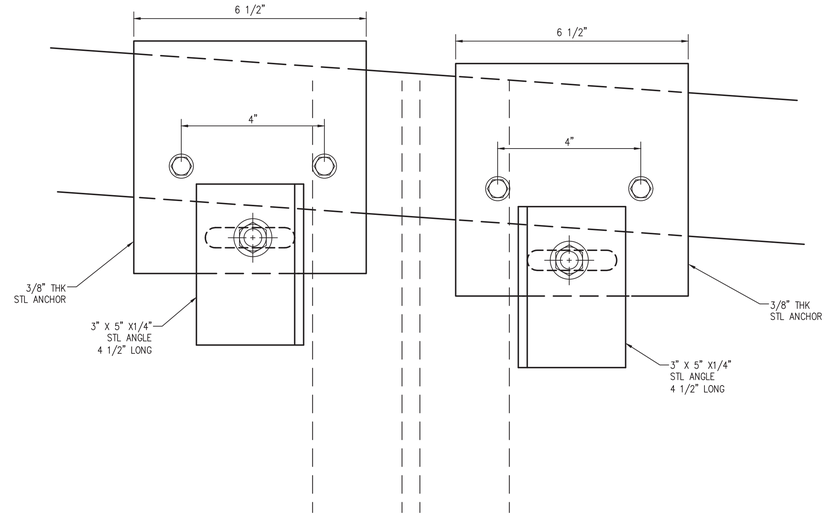

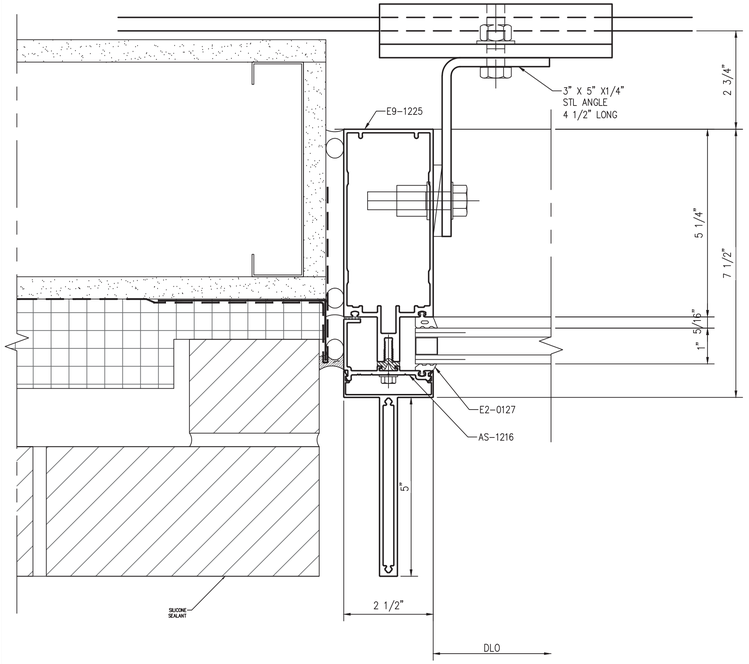

1 WIND LOAD ANCHOR @ ROOF
Scale: 1:1

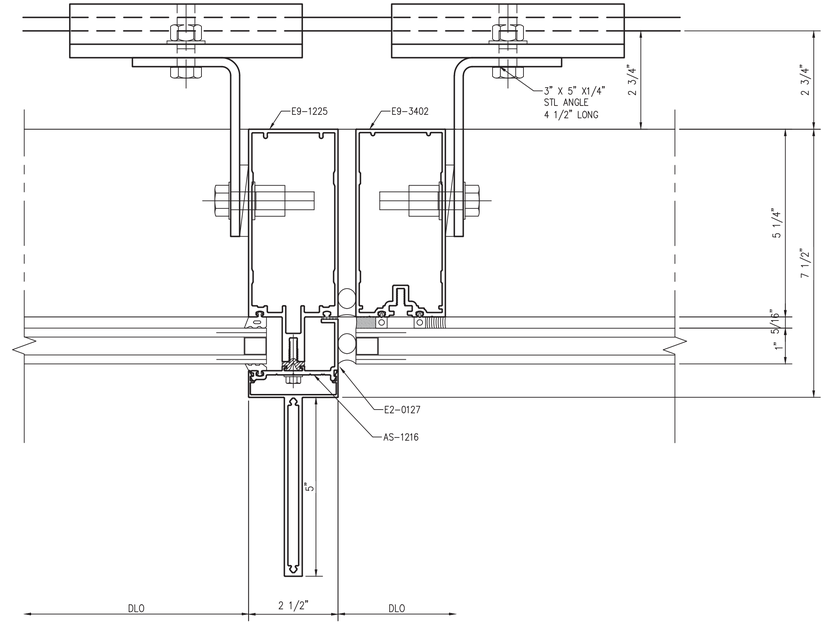

1 WIND LOAD ANCHOR @ ROOF
Scale: 1:1

NGG LTD

NGG LTD, INCORPORATED
1850 Craigshire Road Suite 202
St. Louis, Missouri 63146

Tel 314-336-2515
Fax 314-336-2521

Professional Seal

Stub. No.	Rev. No.	Date	Drawn By	Submitted/Revision Description
3	2	11/8/16	IY	3RD SUBMISSION
2	-	10/19/16	IY	2ND SUBMISSION

Proprietary Notice

This drawing sheet and contents herein are property of NGG. Use of this drawing, contents or design concepts for purposes other than estimating, drawing preparation and/or manufacturing for NGG shall be cause for legal recourse by NGG.

Project Name
WEBSTER UNIVERSITY
Location
St. Louis, Missouri

Architect
CANNON DESIGN
Location
St. Louis, MO

Contractor
PARIC
Location
St. Louis, Missouri

Owner
WEBSTER UNIVERSITY
Location
St. Louis, Missouri

Drawn Date	Scale
8/10/16	AS NOTED

NGG Project No.

Drawing Title
DETAILS

Drawn By	Sheet No.
IY	423

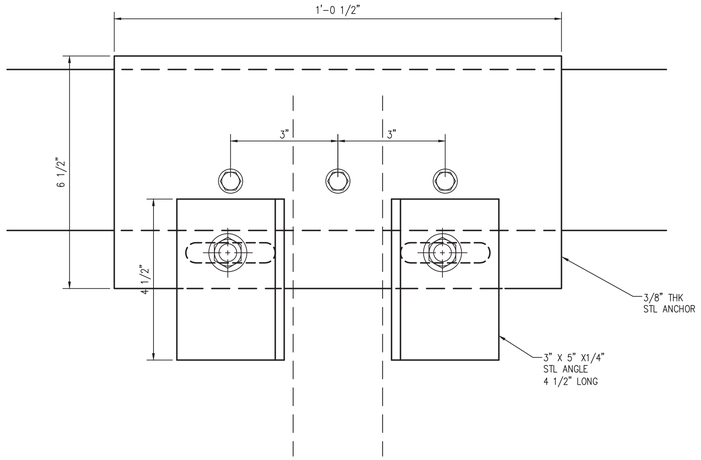

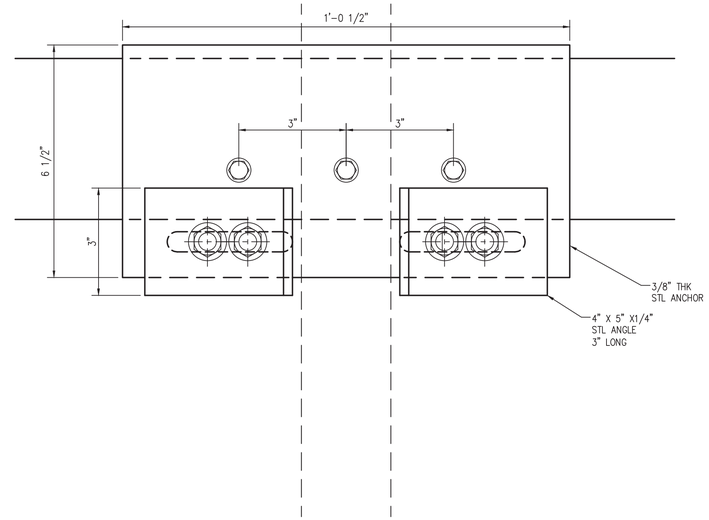

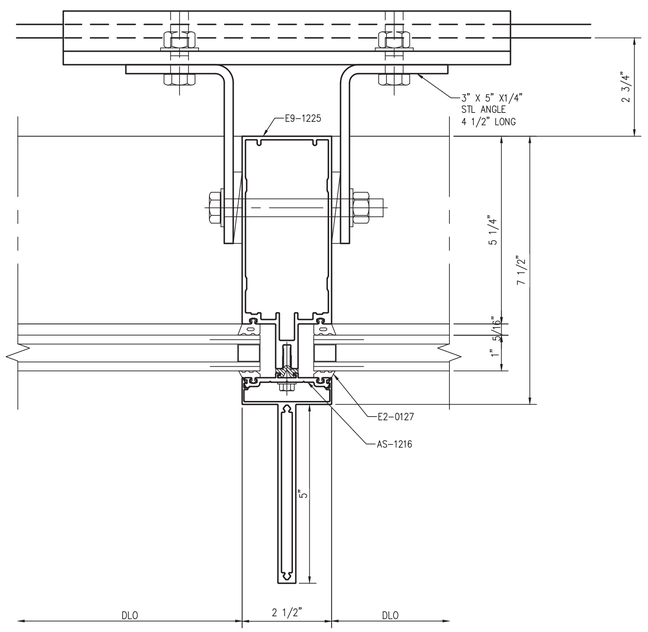

1 WIND LOAD ANCHOR @ ROOF

Scale: 1:1

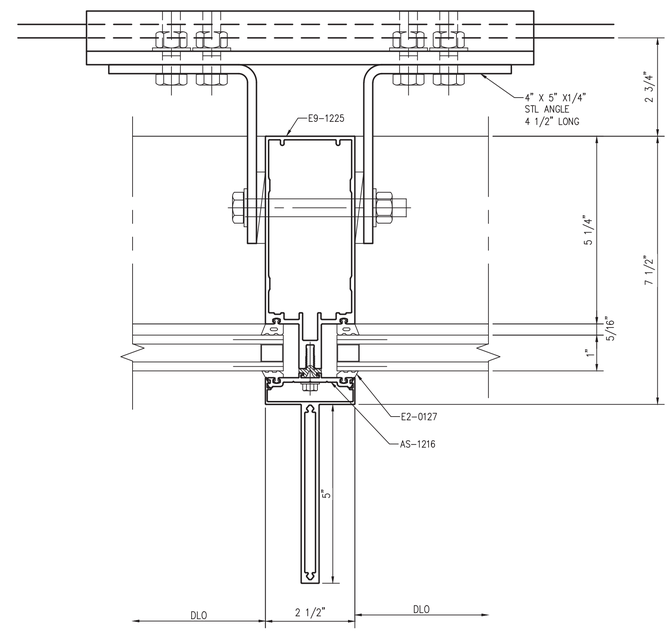

2 DEAD LOAD ANCHOR @ ROOF

Scale: 1:1

NGG LTD

NGG LTD, INCORPORATED
1850 Craigshire Road Suite 202
St. Louis, Missouri 63146

Tel 314-336-2515
Fax 314-336-2521

Professional Seal

Sub. No.	Rev. No.	Date	Drawn By	Submitted/Revision Description
3	2	11/8/16	IY	3RD SUBMISSION
2	-	10/19/16	IY	2ND SUBMISSION

Proprietary Notice

This drawing sheet and contents herein are property of NGG. Use of this drawing, contents or design concepts for purposes other than estimating, drawing preparation and/or manufacturing for NGG shall be cause for legal recourse by NGG.

Project Name
WEBSTER UNIVERSITY
Location
St. Louis, Missouri

Architect
CANNON DESIGN
Location
St. Louis, MO

Contractor
PARIC
Location
St. Louis, Missouri

Owner
WEBSTER UNIVERSITY
Location
St. Louis, Missouri

Drawn Date	Scale
8/10/16	AS NOTED

NGG Project No.

Drawing Title
DETAILS

Drawn By	Sheet No.
IY	424

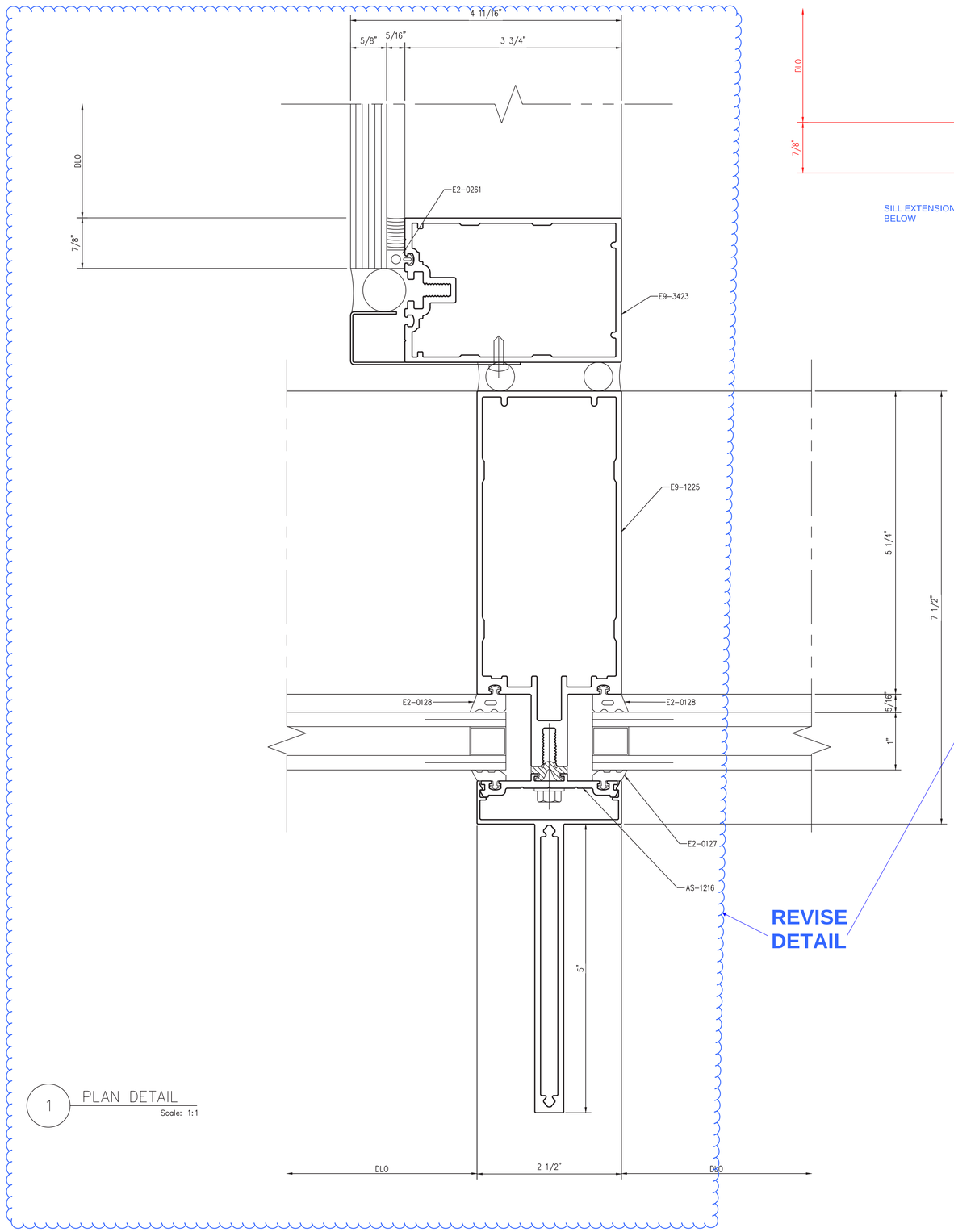

1 PLAN DETAIL
Scale: 1:1

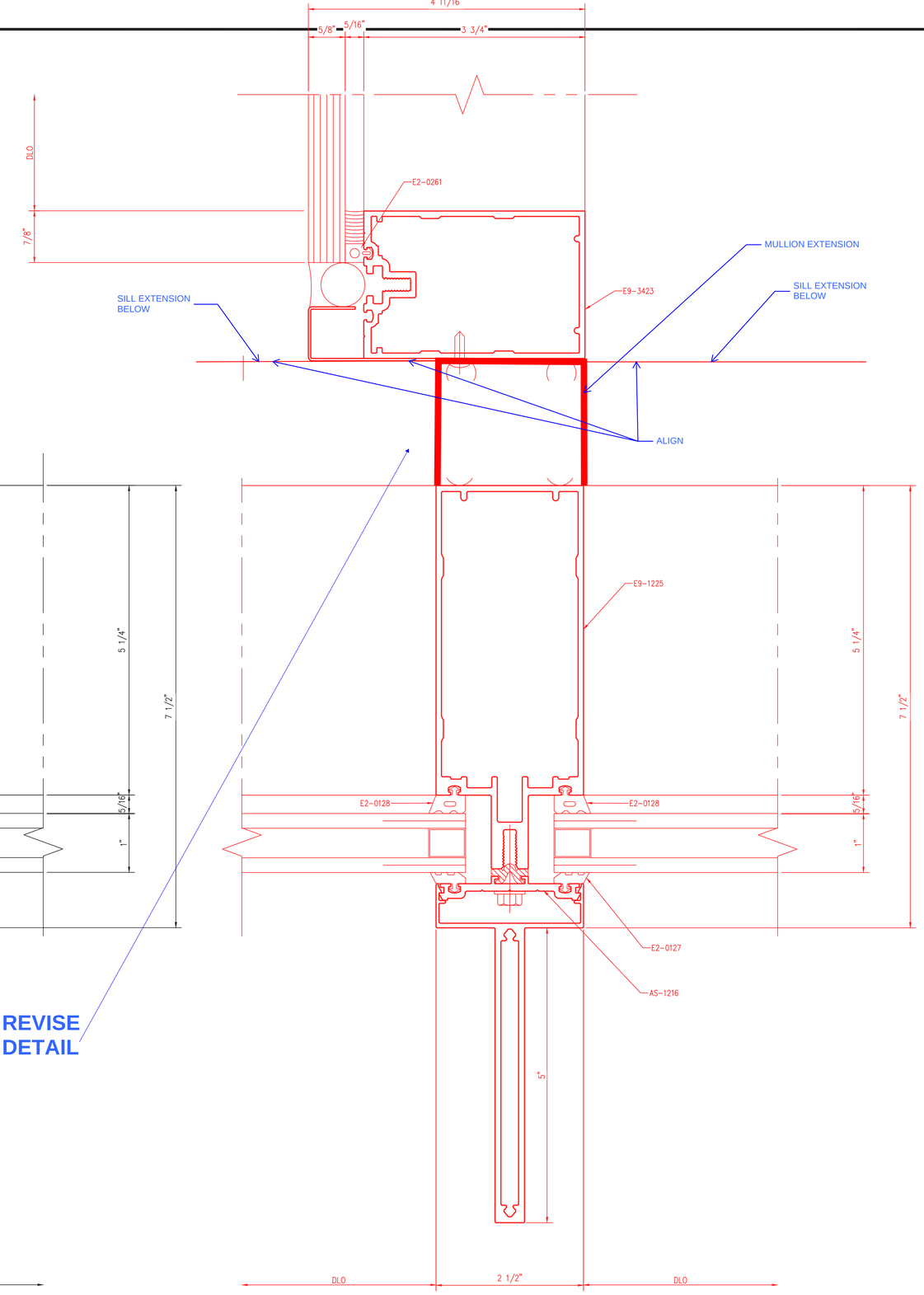

NGG LTD

NGG LTD, INCORPORATED
1850 Craigshire Road Suite 202
St. Louis, Missouri 63146

Tel 314-336-2515
Fax 314-336-2521

Professional Seal

Sub. No.	Rev. No.	Date	Drawn By	Submitted/Revision Description
3	2	11/8/16	IY	3RD SUBMISSION
1	–	5/17/16	IY	1ST SUBMISSION

Proprietary Notice

This drawing sheet and contents herein are property of NGG. Use of this drawing, contents or design concepts for purposes other than estimating, drawing preparation and/or manufacturing for NGG shall be cause for legal recourse by NGG.

Project Name
WEBSTER UNIVERSITY
Location
St. Louis, Missouri

Architect
CANNON DESIGN
Location
St. Louis, MO

Contractor
PARIC
Location
St. Louis, Missouri

Owner
WEBSTER UNIVERSITY
Location
St. Louis, Missouri

Drawn Date	Scale
5/17/16	AS NOTED

NGG Project No.

Drawing Title
DETAILS

Drawn By	Sheet No.
IY	425

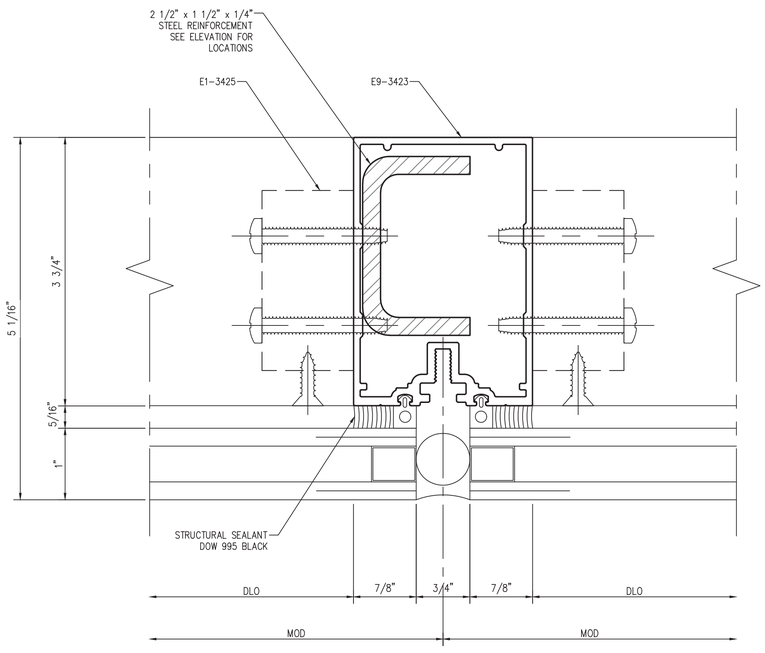

1 SSG MULLION

Scale: 1:1

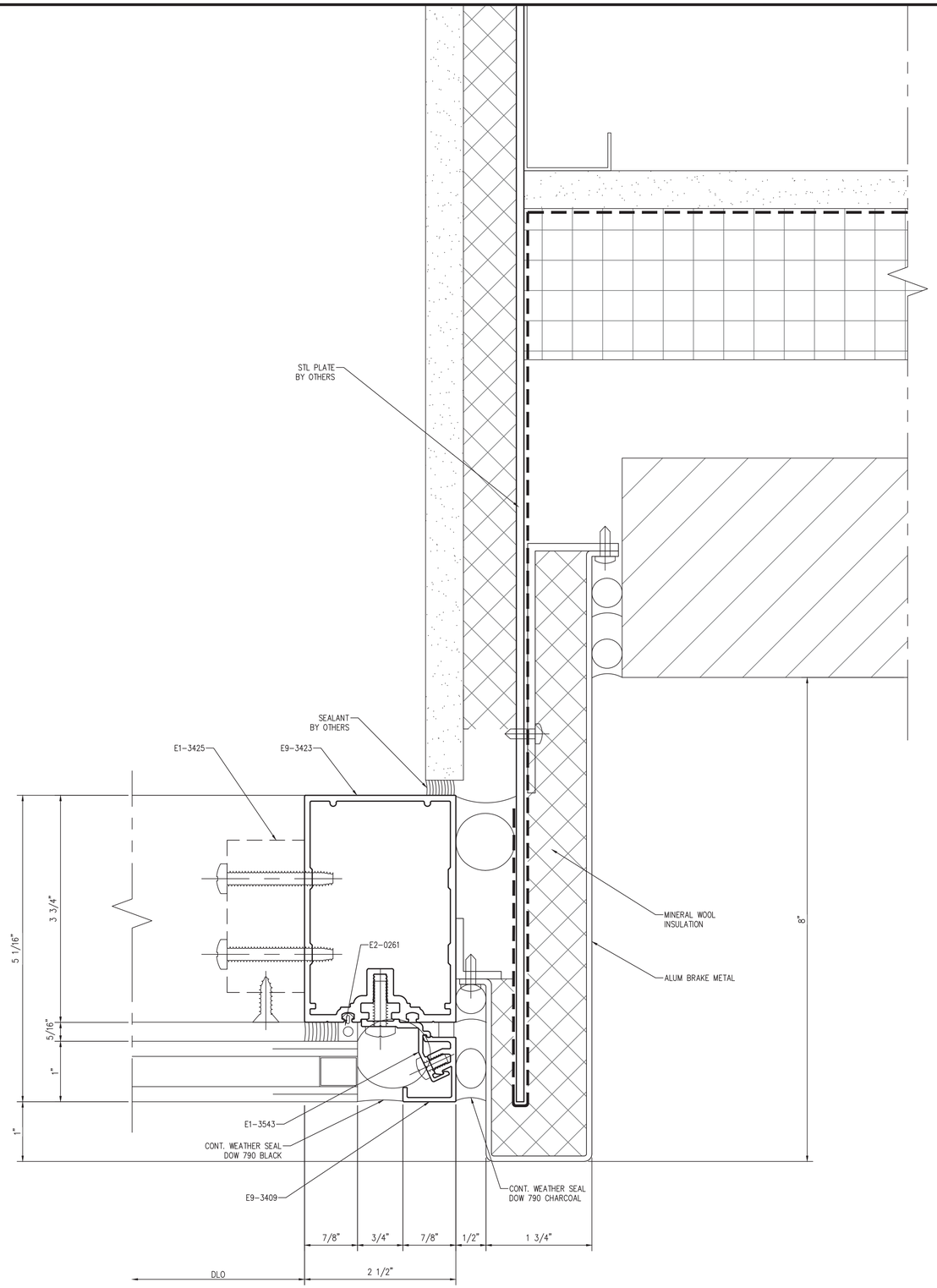

2 JAMB MULLION

Scale: 1:1

NGG LTD

NGG LTD, INCORPORATED
1850 Craigshire Road Suite 202
St. Louis, Missouri 63146

Tel 314-336-2515
Fax 314-336-2521

Professional Seal

Sub. No.	Rev. No.	Date	Drawn By	Submitted/Revision Description
3	2	11/8/16	IY	3RD SUBMISSION
2	1	10/19/16	IY	2ND SUBMISSION
1	–	8/10/16	IY	1ST SUBMISSION

Proprietary Notice

This drawing sheet and contents herein are property of NGG. Use of this drawing, contents or design concepts for purposes other than estimating, drawing preparation and/or manufacturing for NGG shall be cause for legal recourse by NGG.

Project Name
WEBSTER UNIVERSITY
Location
St. Louis, Missouri

Architect
CANNON DESIGN
Location
St. Louis, MO

Contractor
PARIC
Location
St. Louis, Missouri

Owner
WEBSTER UNIVERSITY
Location
St. Louis, Missouri

Drawn Date	Scale
8/10/16	AS NOTED

NGG Project No.

Drawing Title
DETAILS

Drawn By	Sheet No.
IY	451

THIS DETIAL WAS CHANGES FROM PRVIOUS SUBMITAL. IT IS NOT THE CORRECT DETAIL FOR THE LEVEL 01 JAMB DETAIL ON THE NORTH ELEVATION.

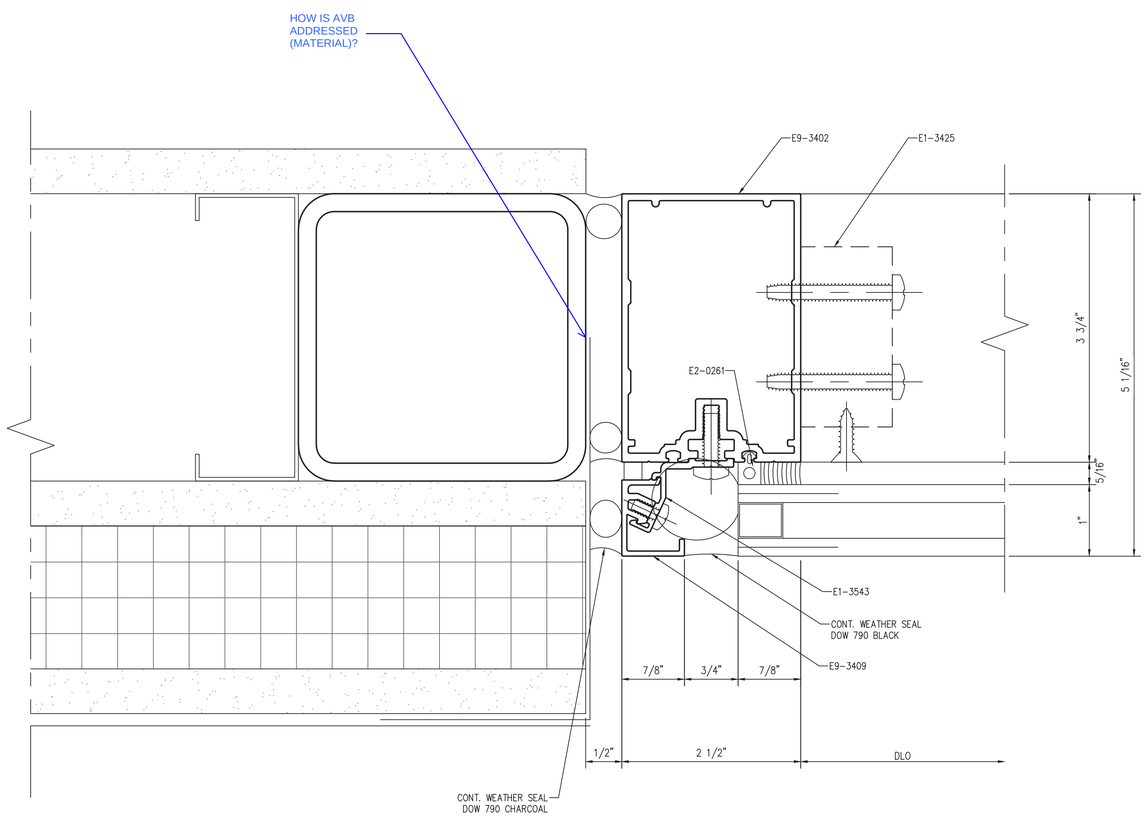

1 JAMB MULLION
Scale: 1:1

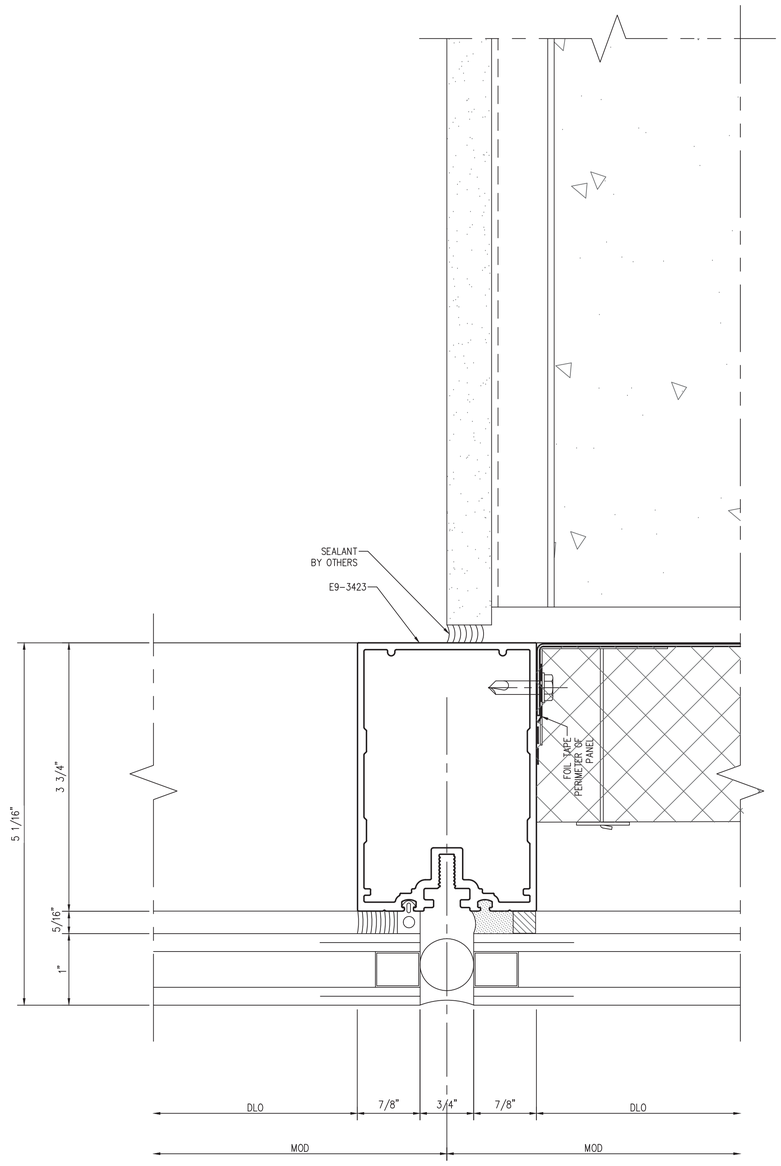

2 SSG MULLION
Scale: 1:1

NGG LTD

NGG LTD, INCORPORATED
1850 Craigshire Road Suite 202
St. Louis, Missouri 63146

Tel 314-336-2515
Fax 314-336-2521

Professional Seal

Sub. No.	Rev. No.	Date	Drawn By	Submittal/Revision Description
3	2	11/8/16	IY	3RD SUBMISSION
2	1	10/19/16	IY	2ND SUBMISSION
1	–	8/10/16	IY	1ST SUBMISSION

Proprietary Notice

This drawing sheet and contents herein are property of NGG. Use of this drawing, contents or design concepts for purposes other than estimating, drawing preparation and/or manufacturing for NGG shall be cause for legal recourse by NGG.

Project Name
WEBSTER UNIVERSITY
Location
St. Louis, Missouri

Architect
CANNON DESIGN
Location
St. Louis, MO

Contractor
PARIC
Location
St. Louis, Missouri

Owner
WEBSTER UNIVERSITY
Location
St. Louis, Missouri

Drawn Date	Scale
8/10/16	AS NOTED

NGG Project No.

Drawing Title
DETAILS

Drawn By	Sheet No.
IY	452

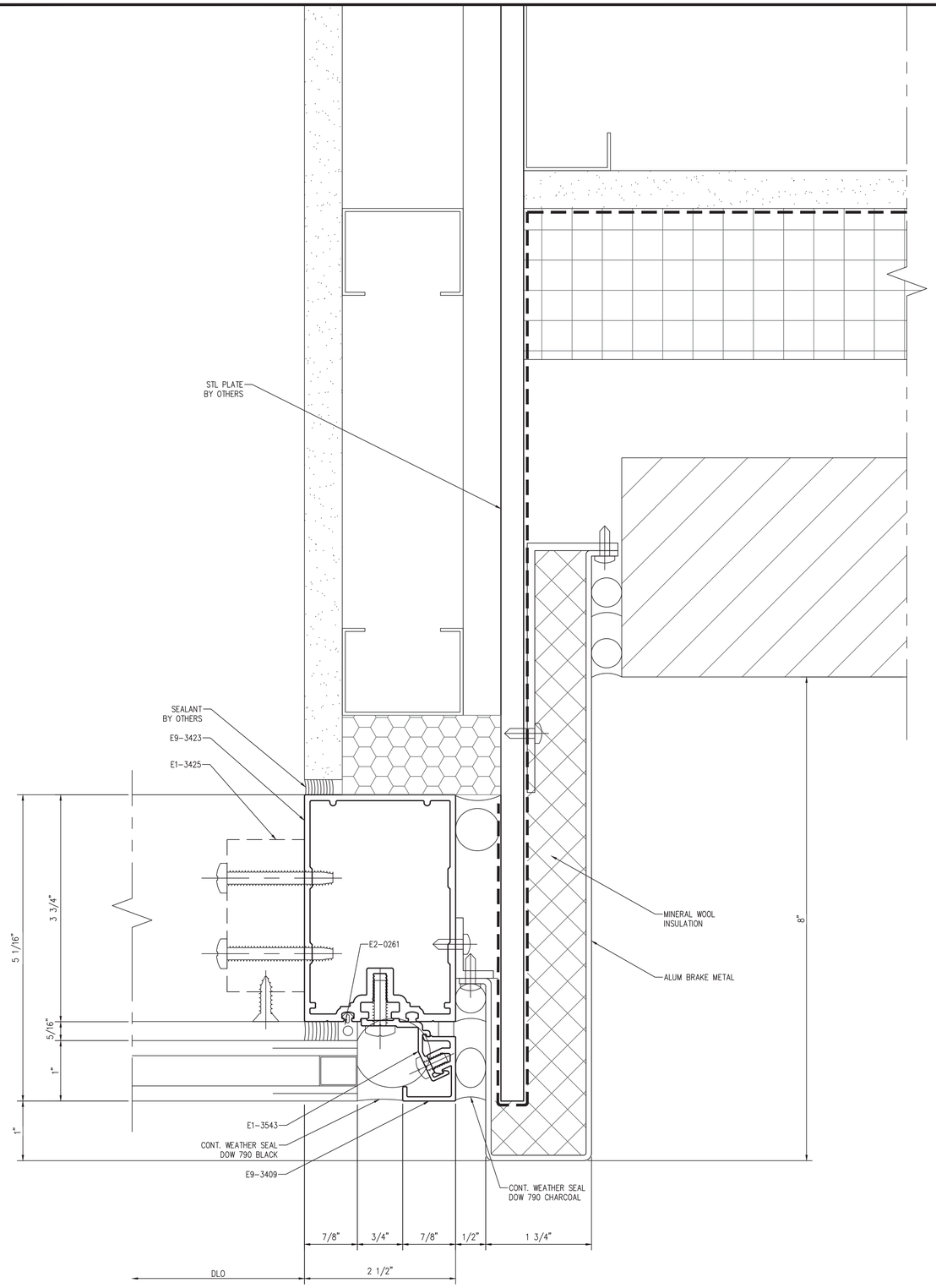

1 JAMB MULLION

Scale: 1:1

NGG LTD

NGG LTD, INCORPORATED
1850 Craigshire Road Suite 202
St. Louis, Missouri 63146

Tel 314-336-2515
Fax 314-336-2521

Professional Seal

Sub. No.	Rev. No.	Date	Drawn By	Submittal/Revision Description
3	2	11/8/16	IY	3RD SUBMISSION
1	–	10/19/16	IY	2ND SUBMISSION

Proprietary Notice

This drawing sheet and contents herein are property of NGG. Use of this drawing, contents or design concepts for purposes other than estimating, drawing preparation and/or manufacturing for NGG shall be cause for legal recourse by NGG.

Project Name
WEBSTER UNIVERSITY
Location
St. Louis, Missouri

Architect
CANNON DESIGN
Location
St. Louis, MO

Contractor
PARIC
Location
St. Louis, Missouri

Owner
WEBSTER UNIVERSITY
Location
St. Louis, Missouri

Drawn Date	Scale
8/10/16	AS NOTED

NGG Project No.

Drawing Title
DETAILS

Drawn By	Sheet No.
IY	453

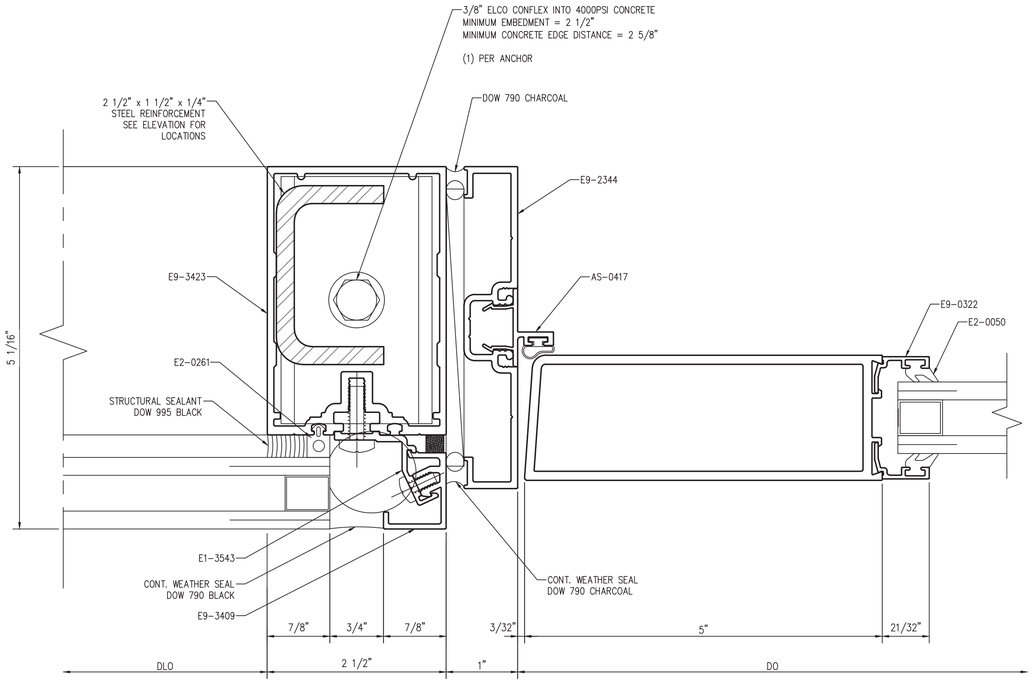

1 DOOR JAMB

Scale: 1:1

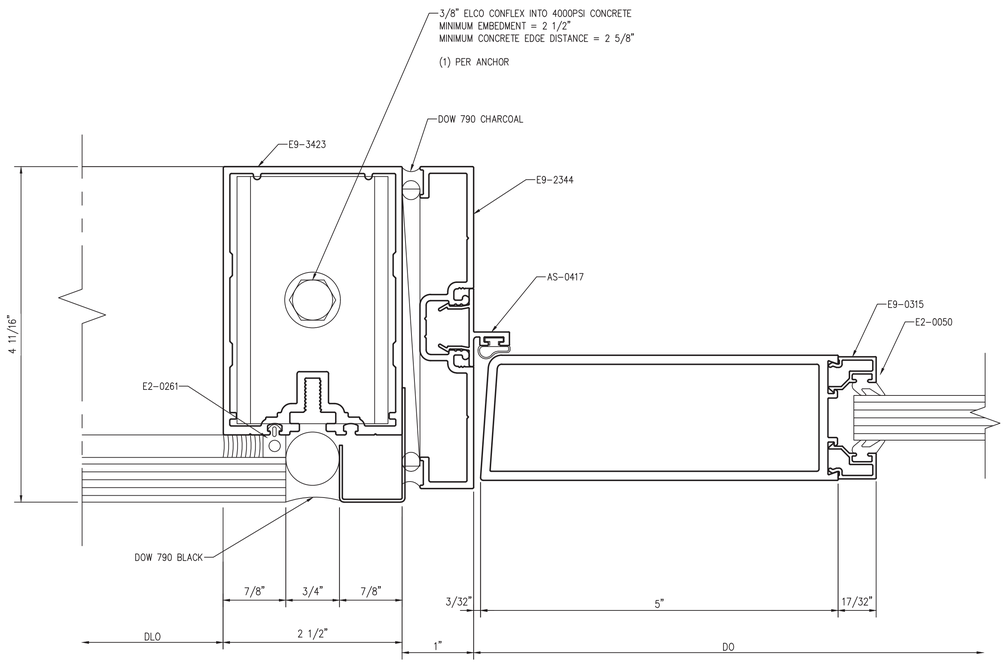

2 DOOR JAMB

Scale: 1:1

NGG LTD

NGG LTD, INCORPORATED
1850 Craigshire Road Suite 202
St. Louis, Missouri 63146

Tel 314-336-2515
Fax 314-336-2521

Professional Seal

Sub. No.	Rev. No.	Date	Drawn By	Submitted/Revision Description
3	2	11/8/16	IY	3RD SUBMISSION
1	–	10/19/16	IY	2ND SUBMISSION

Proprietary Notice

This drawing sheet and contents herein are property of NGG. Use of this drawing, contents or design concepts for purposes other than estimating, drawing preparation and/or manufacturing for NGG shall be cause for legal recourse by NGG.

Project Name
WEBSTER UNIVERSITY
Location
St. Louis, Missouri

Architect
CANNON DESIGN
Location
St. Louis, MO

Contractor
PARIC
Location
St. Louis, Missouri

Owner
WEBSTER UNIVERSITY
Location
St. Louis, Missouri

Drawn Date	Scale
8/10/16	AS NOTED

NGG Project No.

Drawing Title
DETAILS

Drawn By	Sheet No.
IY	454

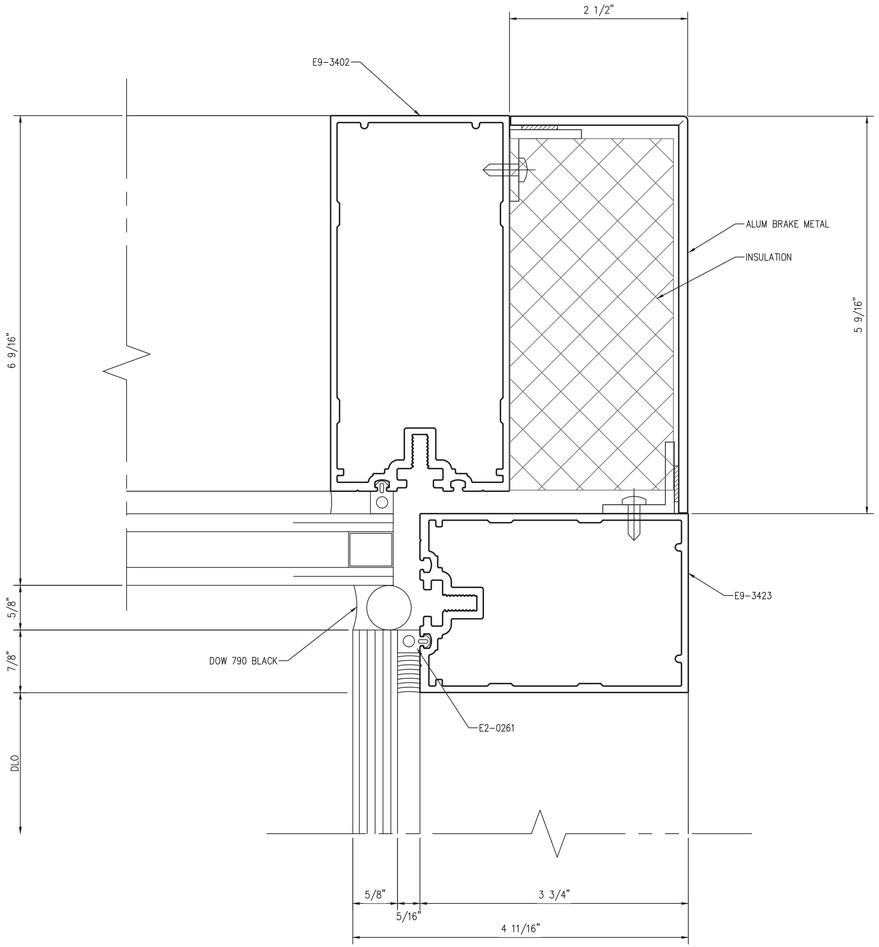

1 CORNER @ INTERIOR ENTRANCE

Scale: 1:1

NGG LTD

NGG LTD, INCORPORATED
1850 Craigshire Road Suite 202
St. Louis, Missouri 63146

Tel 314-336-2515
Fax 314-336-2521

Professional Seal

Sub. No.	Rev. No.	Date	Drawn By	Submitted/Revision Description
3	2	11/8/16	IY	3RD SUBMISSION
1	–	8/10/16	IY	1ST SUBMISSION

Proprietary Notice

This drawing sheet and contents herein are property of NGG. Use of this drawing, contents or design concepts for purposes other than estimating, drawing preparation and/or manufacturing for NGG shall be cause for legal recourse by NGG.

Project Name
WEBSTER UNIVERSITY
Location
St. Louis, Missouri

Architect
CANNON DESIGN
Location
St. Louis, MO

Contractor
PARIC
Location
St. Louis, Missouri

Owner
WEBSTER UNIVERSITY
Location
St. Louis, Missouri

Drawn Date	Scale
8/10/16	AS NOTED

NGG Project No.

Drawing Title
DETAILS

Drawn By	Sheet No.
IY	455